PLUG-IN SERVE OVER

DISASSEMBLY MANUAL

N°DOC. DM000161
REV. "A" - 27/02/23

IT
FR
EN
DE
ES
PT

CONTENT

1. Introduction **3**
1.1 Scope 3
1.2 General safety information 3
1.3 Reasons for a correct disassembly 3
2. Procedure **4**

SYMBOLS

Prohibition symbol: prohibits performing certain operations.

Attention symbol: safety regulations for the operator.

Warning symbol: there is the possibility of causing damage to the bench and / or its components.

Note symbol: Provides useful information.

PPE

	Safety shoes
	Protective gloves
	Safety glasses
	Safety helmet
	Safety vests

1. INTRODUCTION

1.1 Scope

The document "Disassembly manual" indicates how to disassemble EPTA's products. In this document are indicated the steps to follow to disassemble horizontal cabinets.

It also contains information how to protect the safety of the persons in charge of disassembling. Instructions for use are also available on: www.costan.com.

1.2 General safety information

⚠ Do never interrupt the cooling chain of displayed goods.

⚠ Before starting the disassembly procedure, disconnect the equipment from the electrical power supply and secure against re-connecting by unauthorized persons.

⚠ Ensure that the working area is sufficiently illuminated during disassembly activity and use an additional lighting source if necessary.

⚠ Beware of touching any part of the cabinet without DPI.

1.3 Reasons for a correct disassembly

In order to guarantee the correct disposal of the materials that make up the cabinet, it is important to proceed with a correct disassembly.

Correct disassembly thus allows us to increase the percentage of recyclability.

Note: the materials must be disposed of in accordance with the law or disposal regulation in force.

IT FR EN DE ES PT

2. PROCEDURE

1) Secure the cabinet, disconnecting the power.

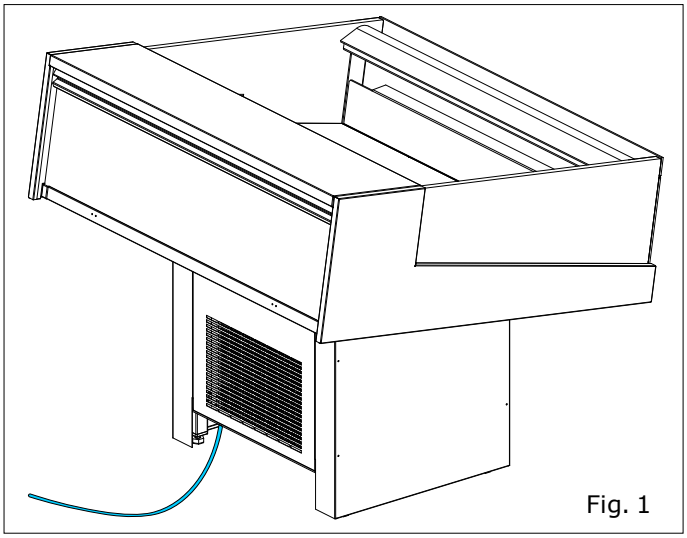

Fig. 1

2) Check the refrigerant type on the serial plate inside the cabinet.

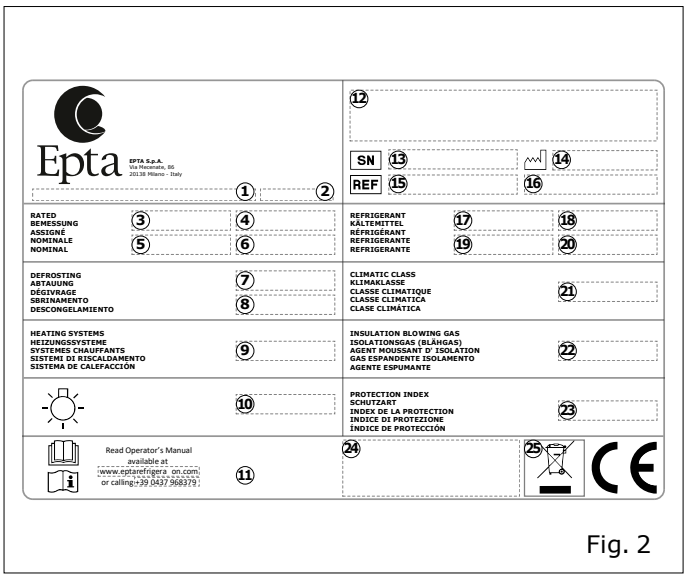

Fig. 2

3) Unscrew the bottom panels.

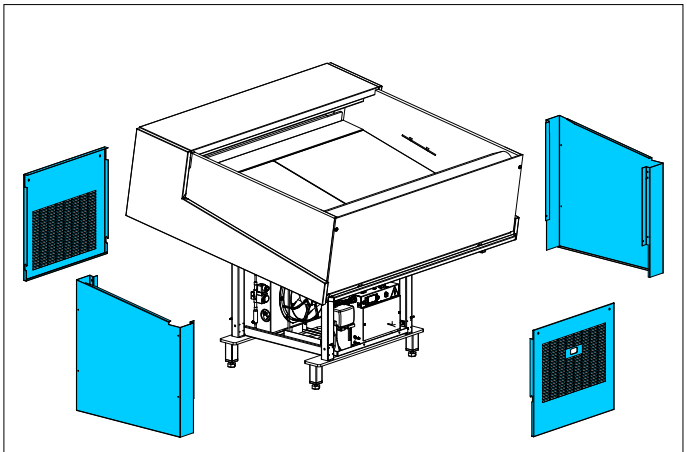

Fig. 3

- Extract the refrigerant and deliver it to authorized companies.
- Extract the unit and disconnect the compressor.
- Disconnect controller and electrical panel.
- Extract the evaporating tray.

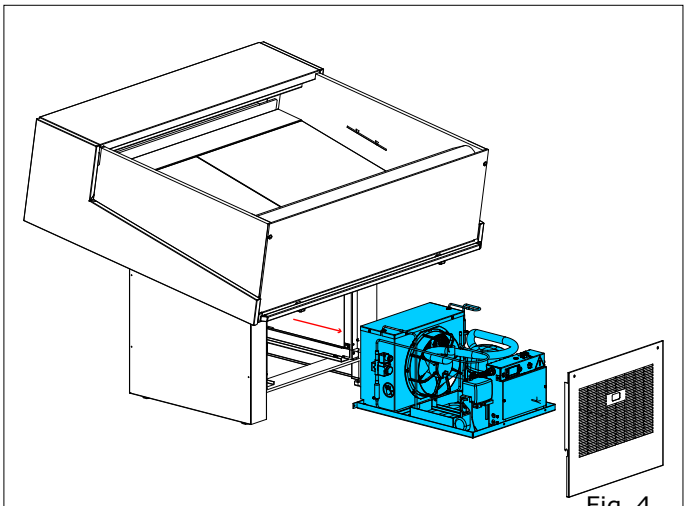

Fig. 4

4) Remove the external glass.

- The first one is fixed with two screw, unscrew it to remove the panel.
- To remove the others just raise them.

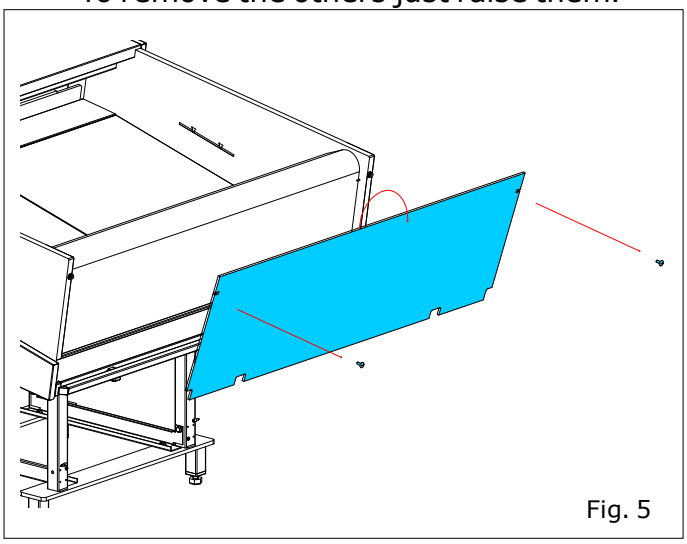

Fig. 5

5) Remove internal baffles.

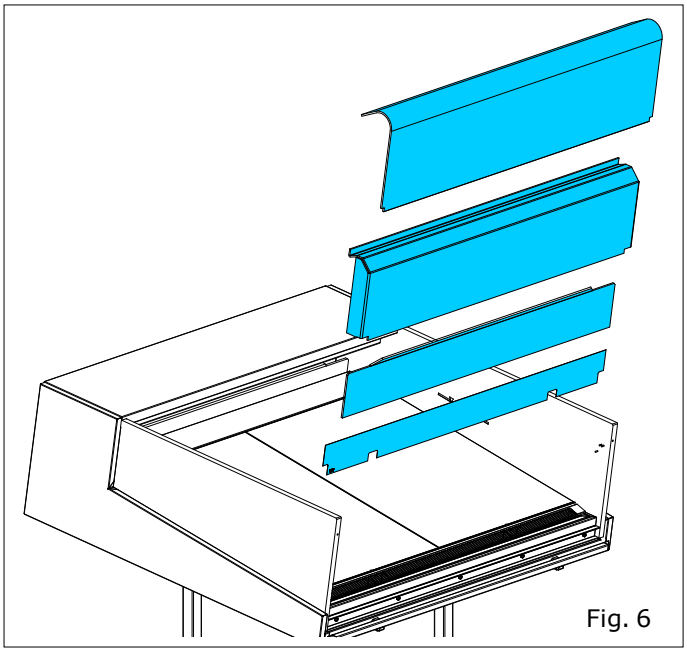

Fig. 6

6) Remove the metal panels and then the plaxiglass panels.

- The metal panel is fixed with two screw, unscrew them to remove the panel.

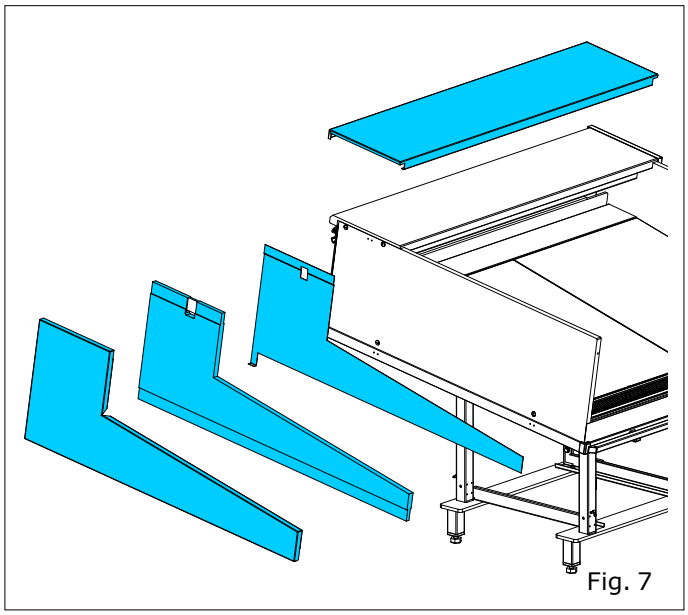

Fig. 7

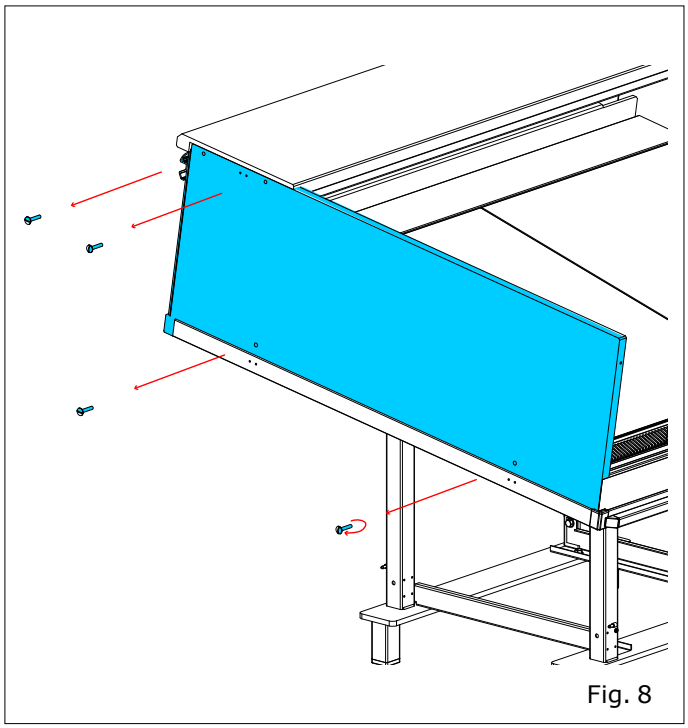

Fig. 8

Dissasembly manual

IT
FR
EN
DE
ES
PT

7) Remove the base deck.

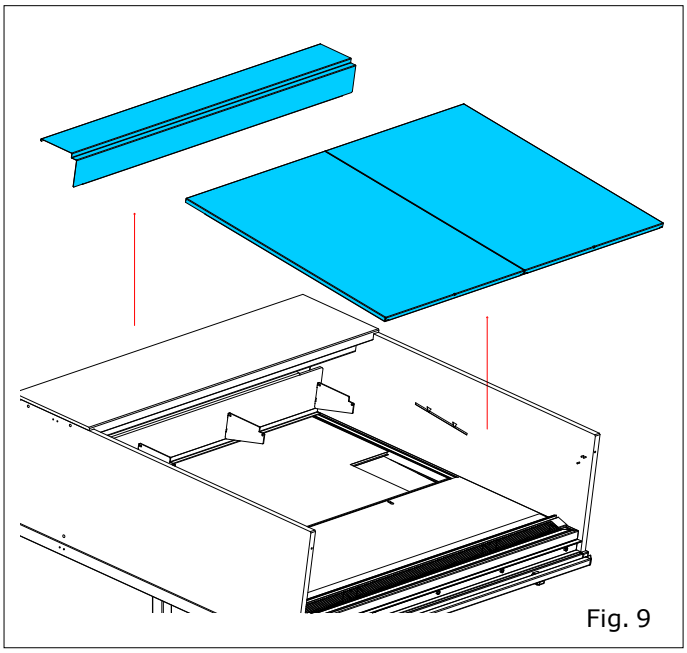

Fig. 9

8) Remove the brackets.

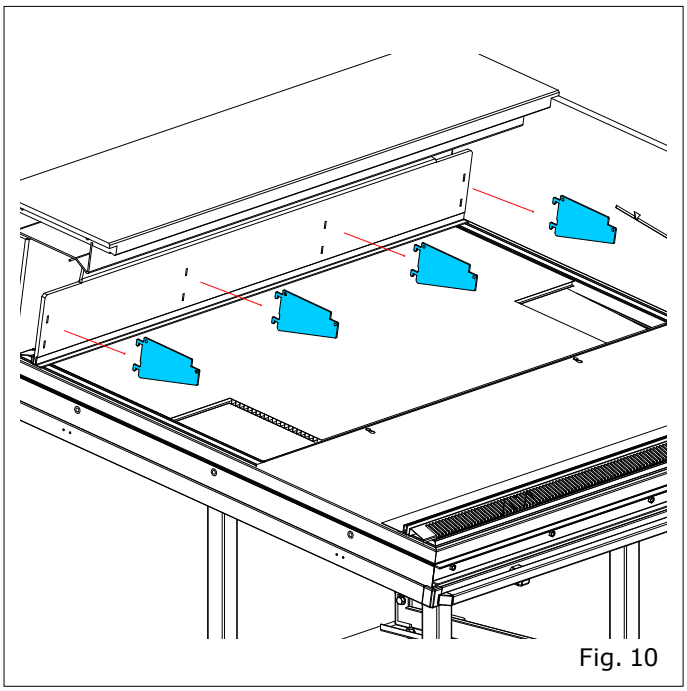

Fig. 10

9) Remove the top shelf unscrewing the screws.

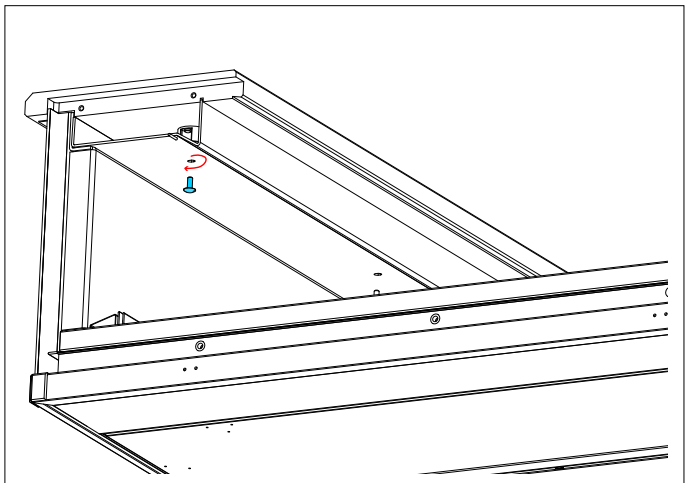

Fig. 11

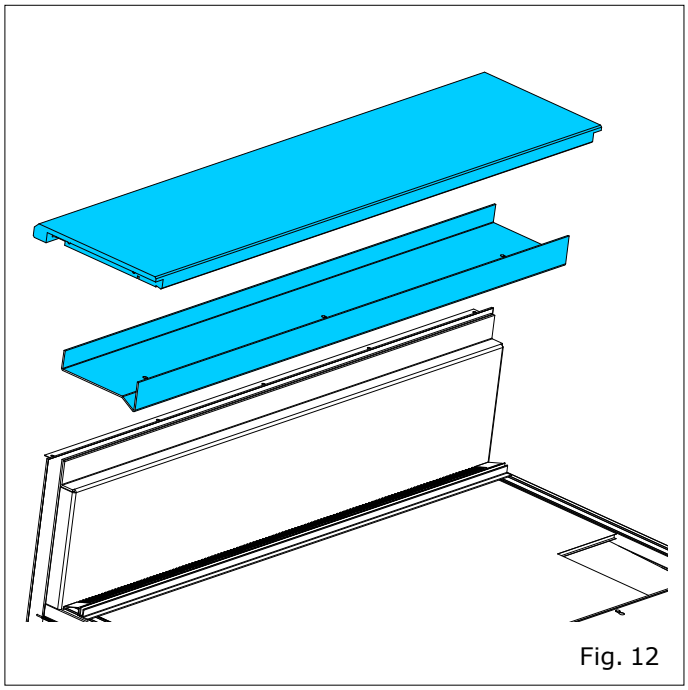

Fig. 12

IT FR EN DE ES PT

10) Remove the insulating panel.

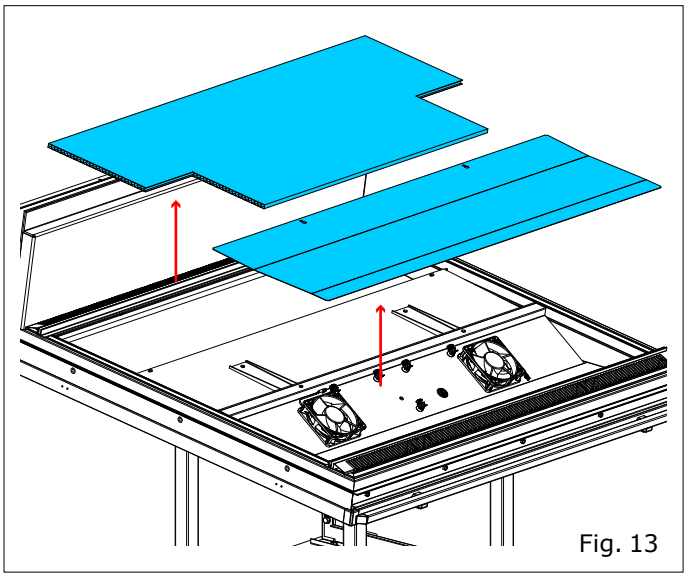

Fig. 13

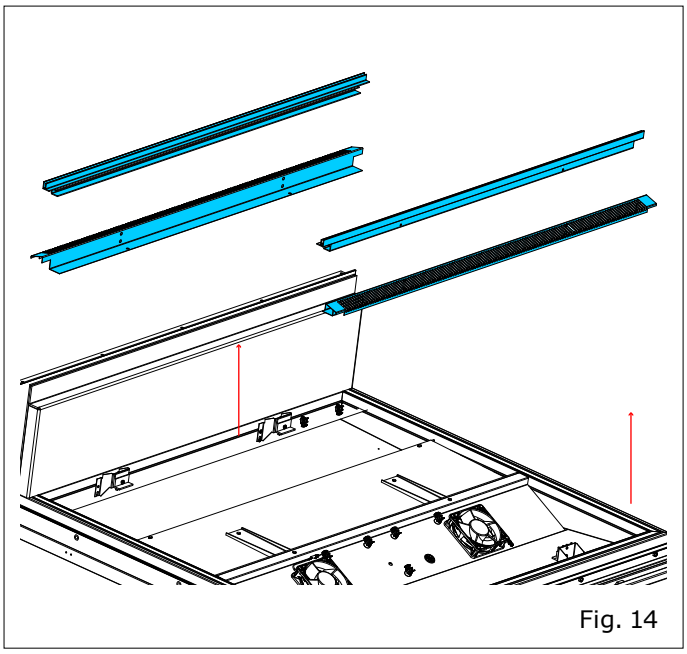

Fig. 14

11) Remove the evaporator

12) Unscrew and remove fan holder.

- divide it from the screw
- remove fan from the fan holder and disconnect the cables

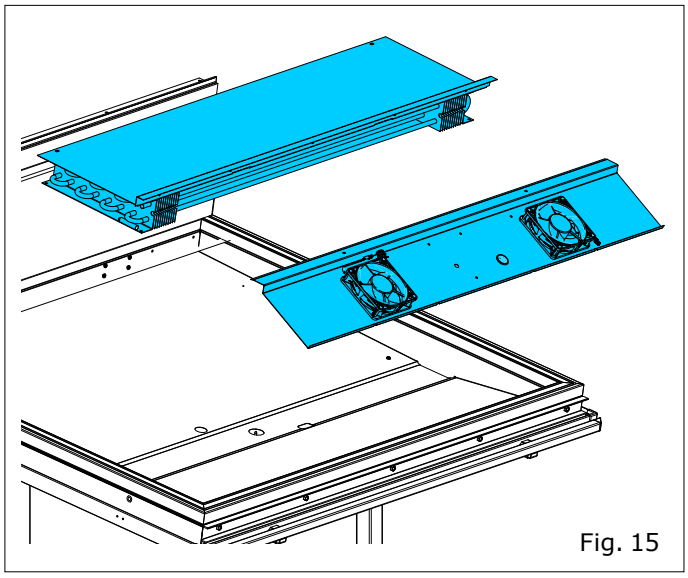

Fig. 15

13) Divide the base from the well.

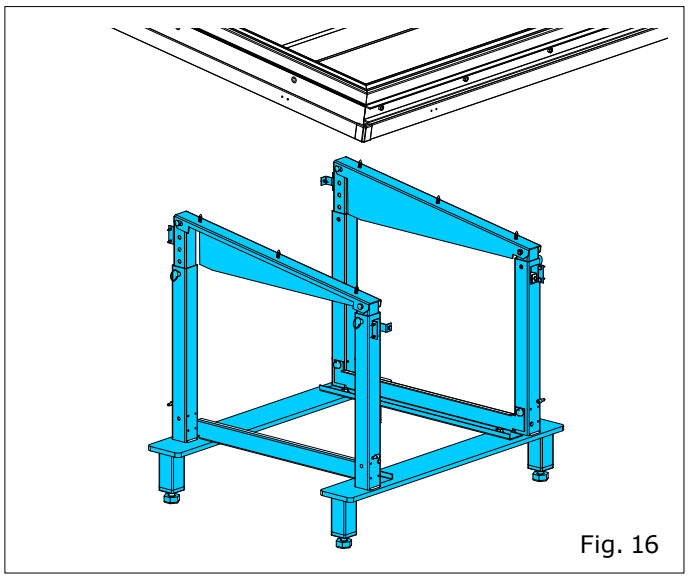

Fig. 16

Bonnet Névé

eptarefrigeration

www.bonnetneve.com

Epta

Advanced Solutions for your Store

EUROVENT CERTIFIED PERFORMANCE

www.eurovent-certification.com

Epta S.p.A. participates in the ECC programme for: Refrigerated display cabinets (RDC); Check ongoing validity of certificate online: www.eurovent-certification.com

TÜV AUSTRIA CERTIFIED

EN ISO 9001 20 100 52000877
EN ISO 14001 20 104 141373322
OHSAS 18001 20 118 141373323

CE