REMOTE HORIZONTAL

DISASSEMBLY MANUAL

N°DOC. DM000157
REV. "A" - 27/02/23

IT
FR
EN
DE
ES
PT

CONTENT

1. Introduction **3**
1.1 Scope 3
1.2 General safety information 3
1.3 Reasons for a correct disassembly 3
2. Procedure **4**

SYMBOLS USED

Prohibition symbol: it prohibits the carrying out of specific operations.

Attention symbol: accident prevention rules for the operator.

Warning symbol: there is the possibility of damaging the cabinet and/or its components.

Note symbol: it provides useful information.

Personal protection equipment

	Safety shoes
	Protective gloves
	Safety glasses
	Safety helmet
	Safety vests

1. INTRODUCTION

1.1 Scope

The document "Disassembly manual" indicates how to disassemble EPTA's products. In this document are indicated the steps to follow to disassemble horizontal cabinets.

It also contains information how to protect the safety of the persons in charge of disassembling. Instructions for use are also available on: www.costan.com.

1.2 General safety information

⚠ Do never interrupt the cooling chain of displayed goods.

⚠ Before starting the disassembly procedure, disconnect the equipment from the electrical power supply and secure against re-connecting by unauthorized persons.

⚠ Ensure that the working area is sufficiently illuminated during disassembly activity and use an additional lighting source if necessary.

⚠ Beware of touching any part of the cabinet without DPI.

1.3 Reasons for a correct disassembly

In order to guarantee the correct disposal of the materials that make up the cabinet, it is important to proceed with a correct disassembly.

Correct disassembly thus allows us to increase the percentage of recyclability.

Note: the materials must be disposed of in accordance with the law or disposal regulation in force.

IT

FR

EN

DE

ES

PT

2. PROCEDURE

1) Secure the cabinet, disconnecting the power.

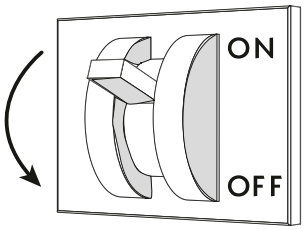

Fig. 1

2) Position of the electrical panels.

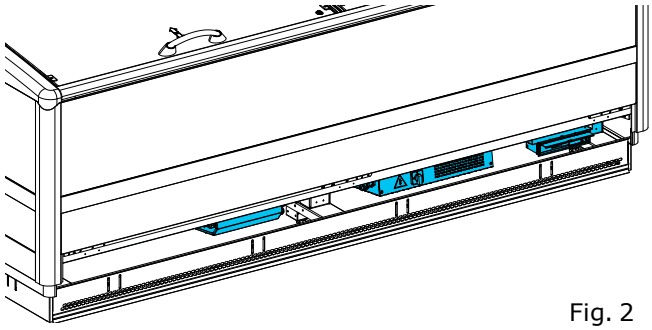

Fig. 2

3) Check the serial plate if the cabinet is plug-in or remote.

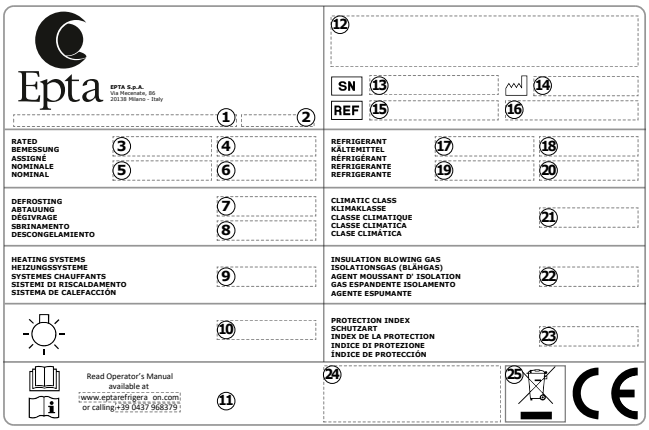

Fig. 3

4) Unscrew the bottom panels.

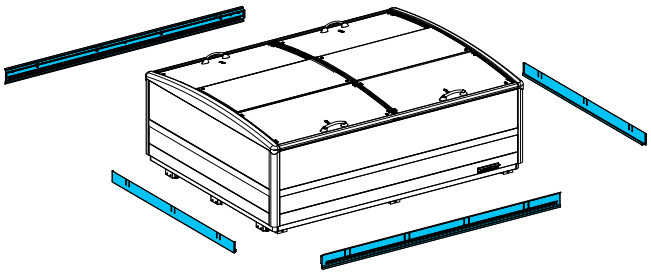

Fig. 4

5) Open the slides and unscrew the screws. Remove the side handrail.

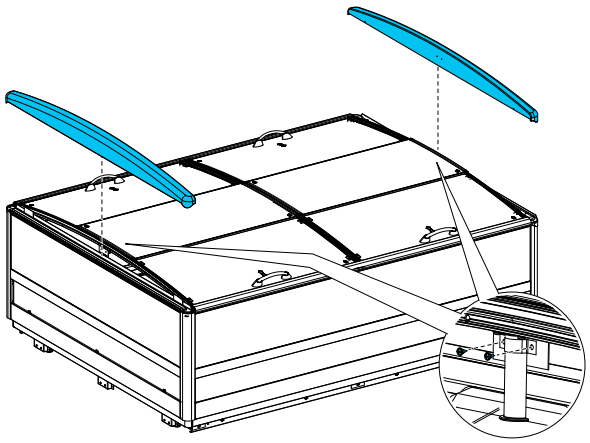

Fig. 5

6) Open the slides and unscrew the screws. Remove the front handrail.

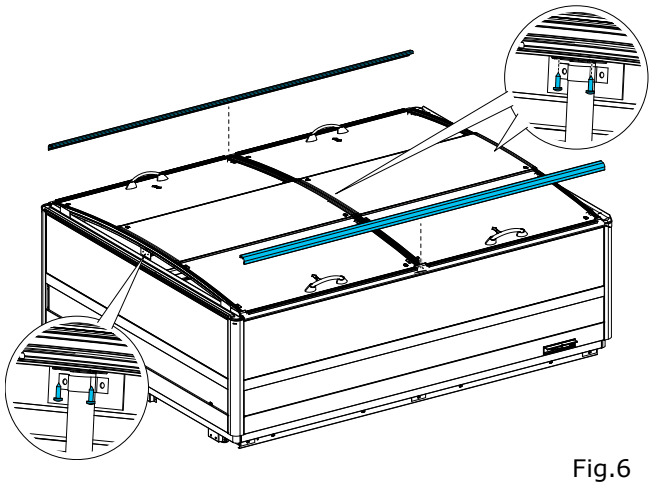

Fig.6

7) Open the slides and unscrew the screws. Remove the brackets.

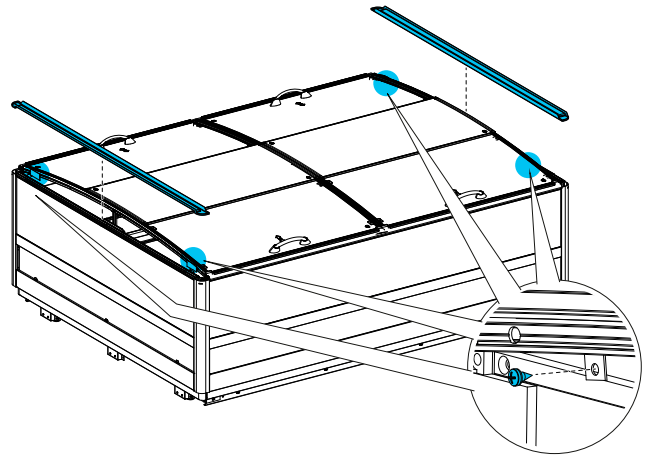

Fig. 7

8) Unscrew the screws on the four sides of the covers. Remove the covers one by one.

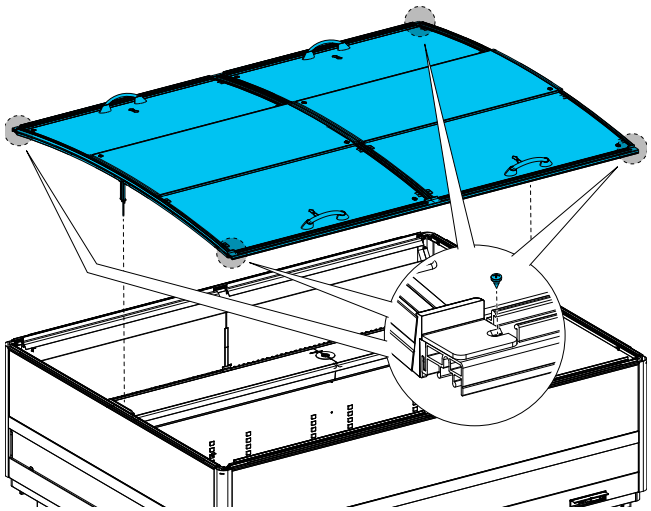

Fig. 8

9) Remove the internal glasses.

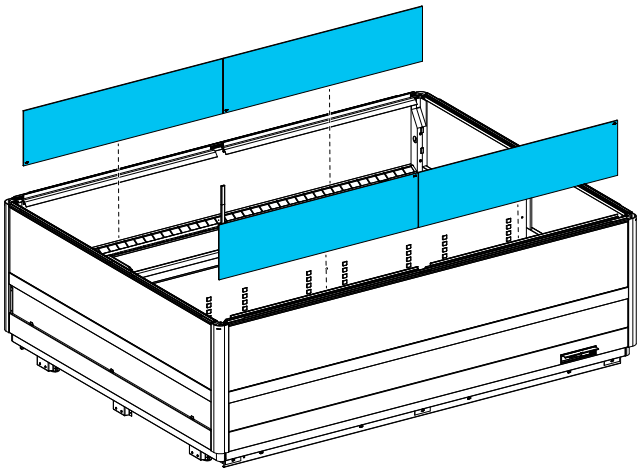

Fig. 9

Dissasembly manual

IT
FR
EN
DE
ES
PT

10) Remove the bulb holders and bulbs.

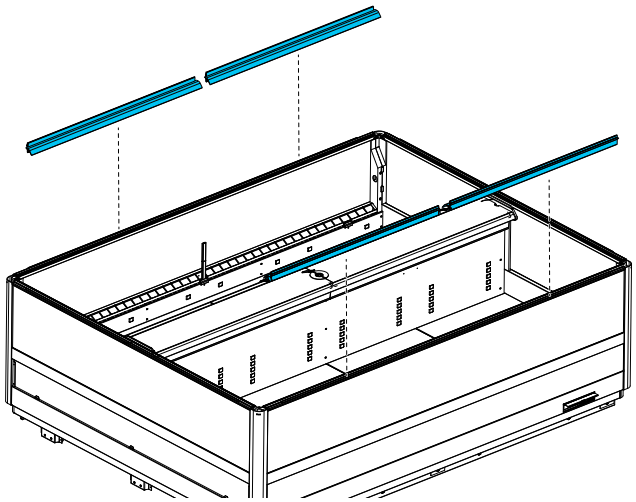

Fig. 10

11) Remove the profiles.

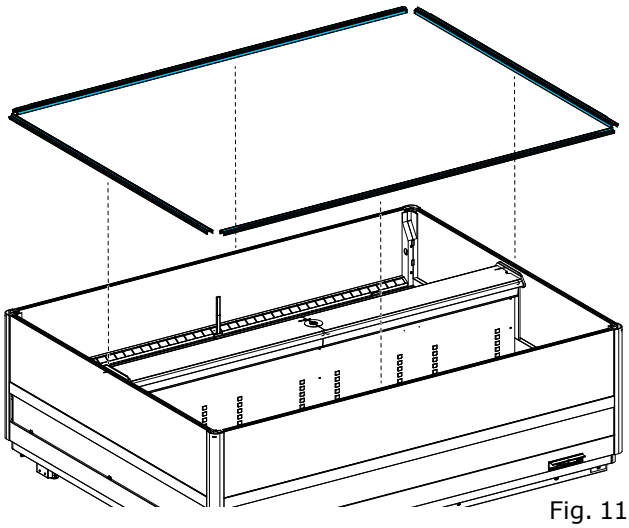

Fig. 11

12) Remove the center panels and brackets.

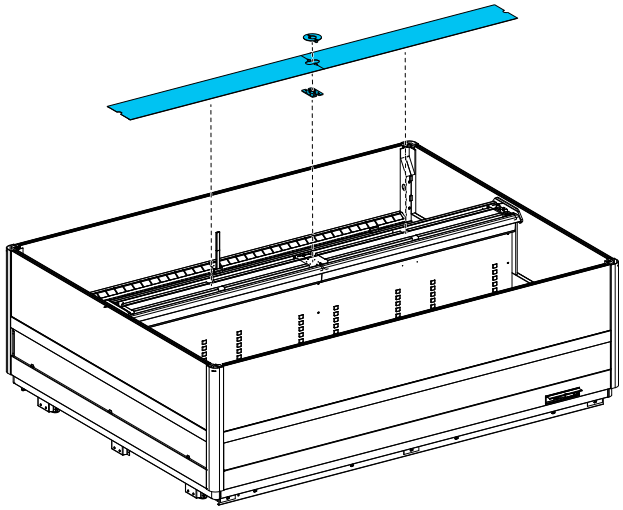

Fig. 12

13) Remove the brackets. Remove the insulator.

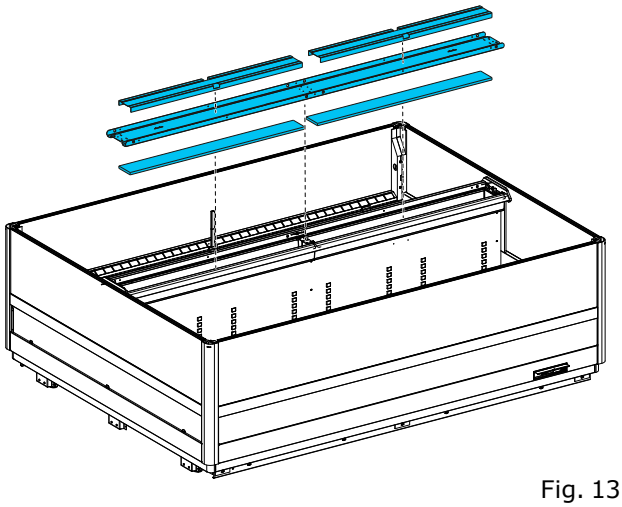

Fig. 13

14) Remove the bulb holders and bulbs.

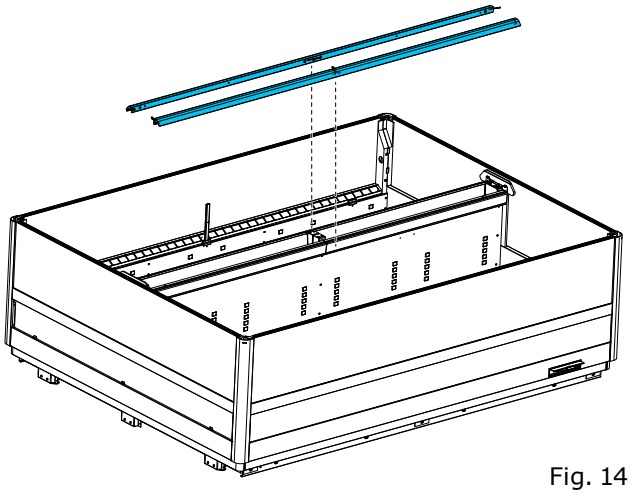

Fig. 14

15) Remove the bottom planes.

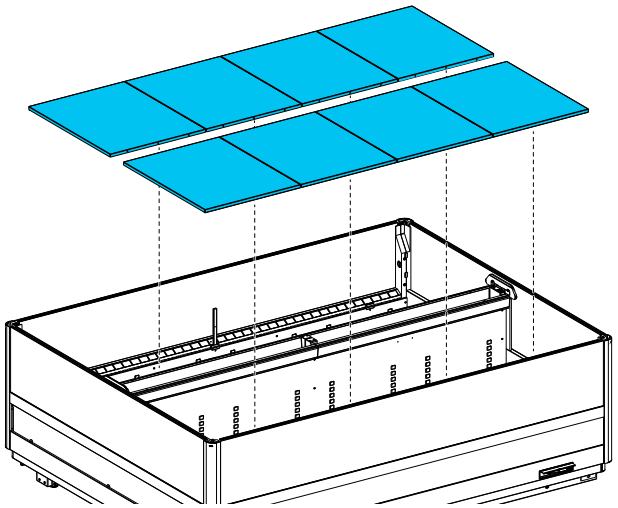

Fig. 15

16) Remove the central part.

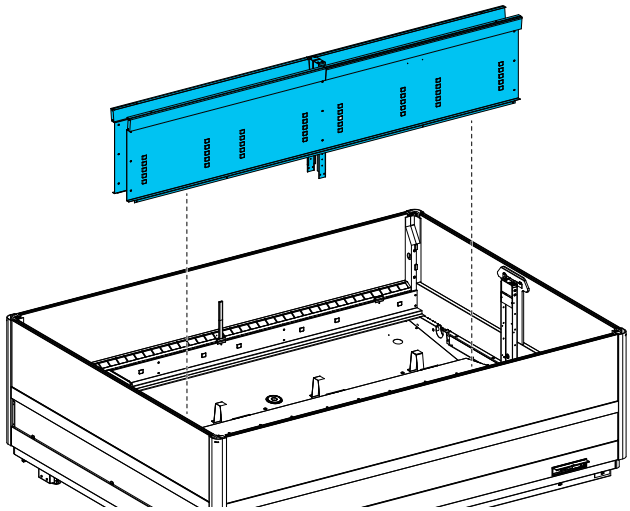

Fig. 16

17) Remove the bottom shelf supports. Remove the fan holders.

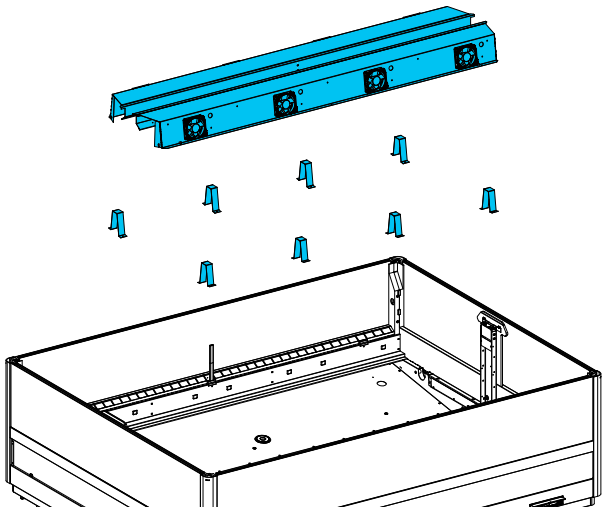

Fig. 17

Dissasembly manual

IT
FR
EN
DE
ES
PT

18) Remove the side grilles.

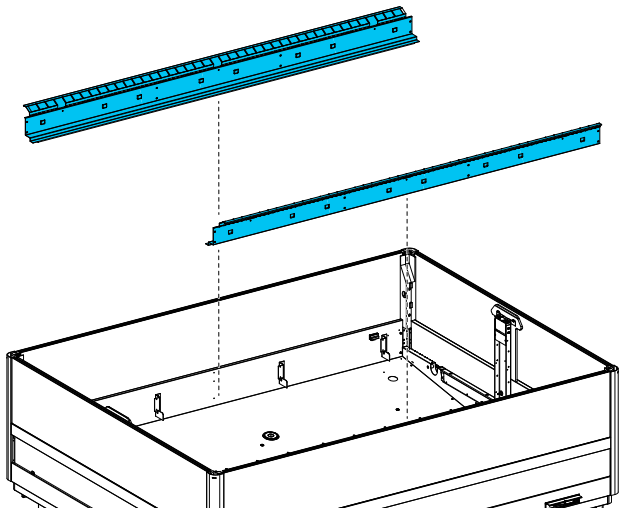

Fig. 18

19) Remove the side uprights. Remove the internal glasses.

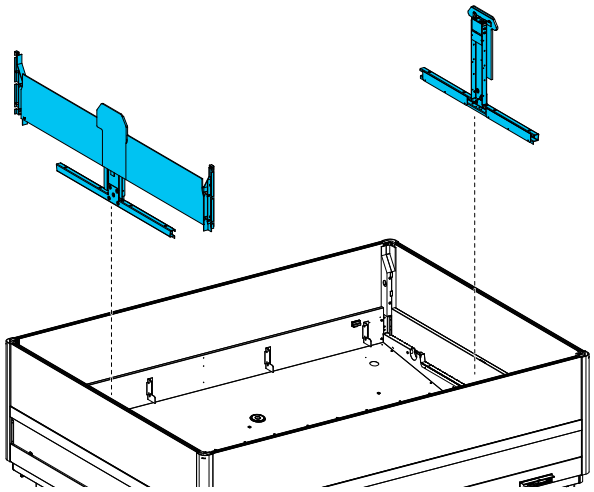

Fig. 19

20) Remove the side bumpers.

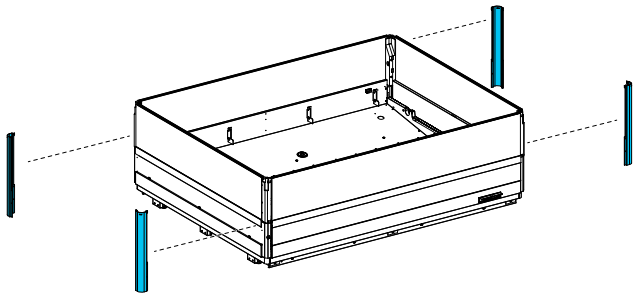

Fig. 20

21) Remove the glasses.

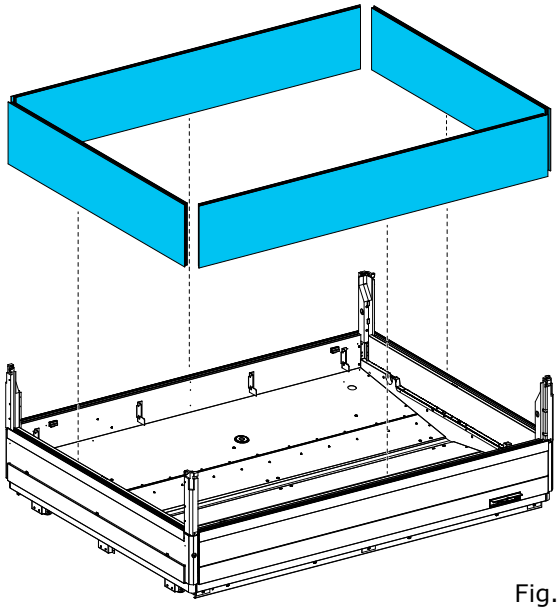

Fig. 21

22) Remove the uprights. Remove the panels.

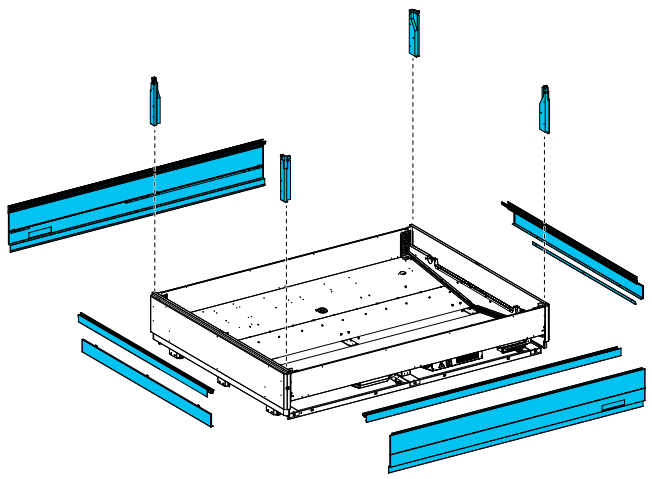

Fig. 22

23) Remove the electrical boxes and the control panel.

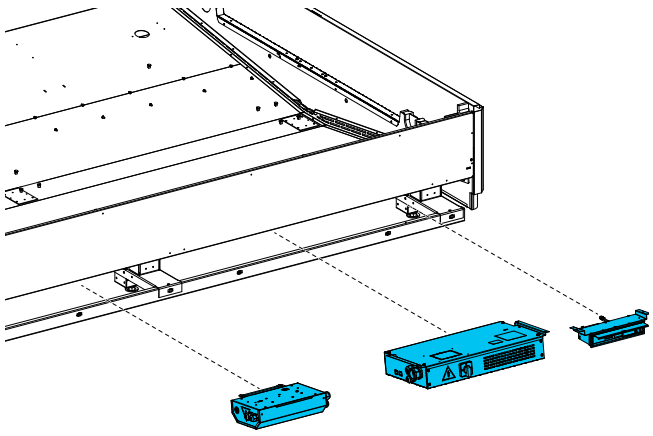

Fig. 23

24) Remove the bottom and disassemble the base.

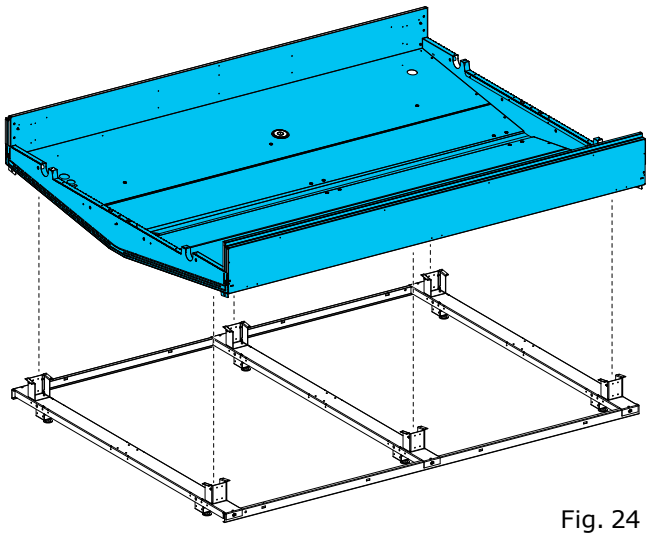

Fig. 24

Bonnet Névé

eptarefrigeration

www.bonnetneve.com

Epta

Advanced Solutions for your Store

EUROVENT CERTIFIED PERFORMANCE

www.eurovent-certification.com

Epta S.p.A. participates in the ECC programme for: Refrigerated display cabinets (RDC); Check ongoing validity of certificate online: www.eurovent-certification.com

TÜV AUSTRIA CERTIFIED

EN ISO 9001 20 100 52000877
EN ISO 14001 20 104 141373322
OHSAS 18001 20 118 141373323

CE