REMOTE SERVE OVER

DISASSEMBLY MANUAL

N°DOC. DM000158
REV. "A" - 27/02/23

IT
FR
EN
DE
ES
PT

CONTENT

1. Introduction **3**
- 1.1 Scope 3
- 1.2 General safety information 3
- 1.3 Reasons for a correct disassembly 3

2. Procedure **4**

SYMBOLS USED

Prohibition symbol: it prohibits the carrying out of specific operations.

Attention symbol: accident prevention rules for the operator.

Warning symbol: there is the possibility of damaging the cabinet and/or its components.

Note symbol: it provides useful information.

Personal protection equipment

	Safety shoes
	Protective gloves
	Safety glasses
	Safety helmet
	Safety vests

1. INTRODUCTION

1.1 Scope

The document "Disassembly manual" indicates how to disassemble EPTA's products. In this document are indicated the steps to follow to disassemble horizontal cabinets.

It also contains information how to protect the safety of the persons in charge of disassembling. Instructions for use are also available on: www.costan.com.

1.2 General safety information

⚠ Do never interrupt the cooling chain of displayed goods.

⚠ Before starting the disassembly procedure, disconnect the equipment from the electrical power supply and secure against re-connecting by unauthorized persons.

⚠ Ensure that the working area is sufficiently illuminated during disassembly activity and use an additional lighting source if necessary.

⚠ Beware of touching any part of the cabinet without DPI.

1.3 Reasons for a correct disassembly

In order to guarantee the correct disposal of the materials that make up the cabinet, it is important to proceed with a correct disassembly.

Correct disassembly thus allows us to increase the percentage of recyclability.

Note: the materials must be disposed of in accordance with the law or disposal regulation in force.

IT

FR

EN

DE

ES

PT

2. PROCEDURE

1) Secure the cabinet, disconnecting the power.

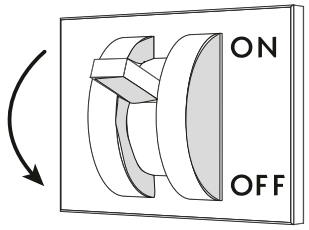

Fig. 1

2) Position of the electrical panels.

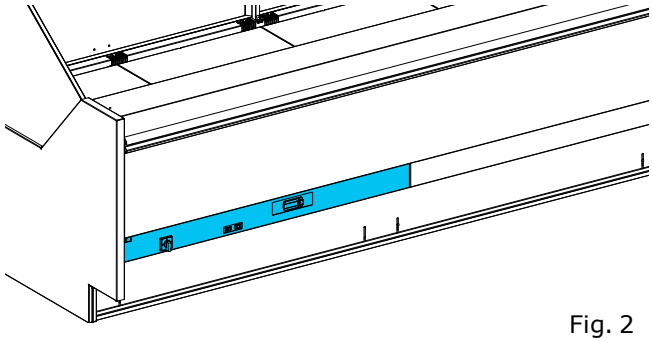

Fig. 2

3) Check the serial plate if the cabinet is plug-in or remote.

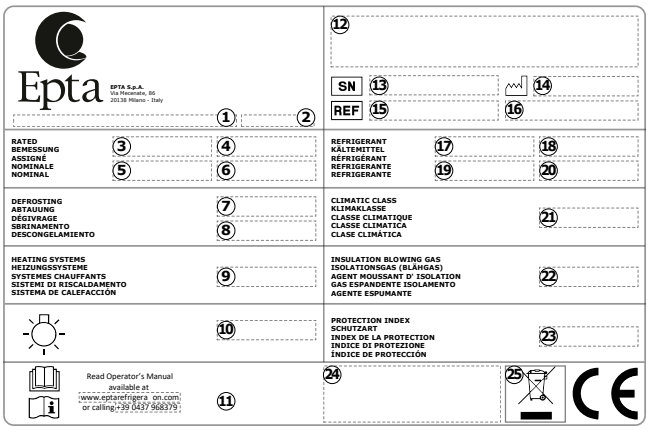

Fig. 3

4) Unscrew the bottom panels.

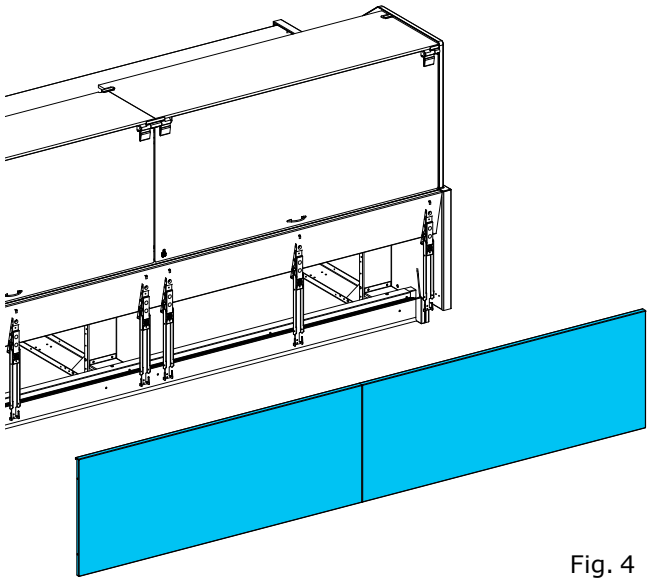

Fig. 4

5) Remove the front panel supports by unscrewing the screws.

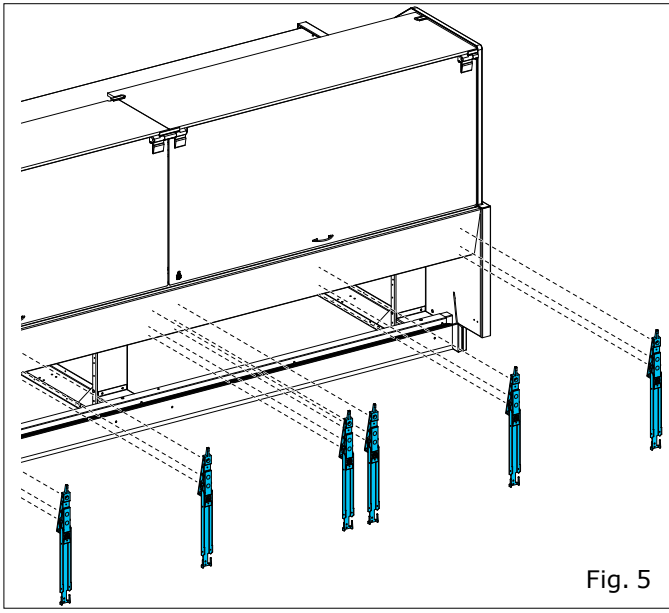

Fig. 5

6) Remove the endwall.

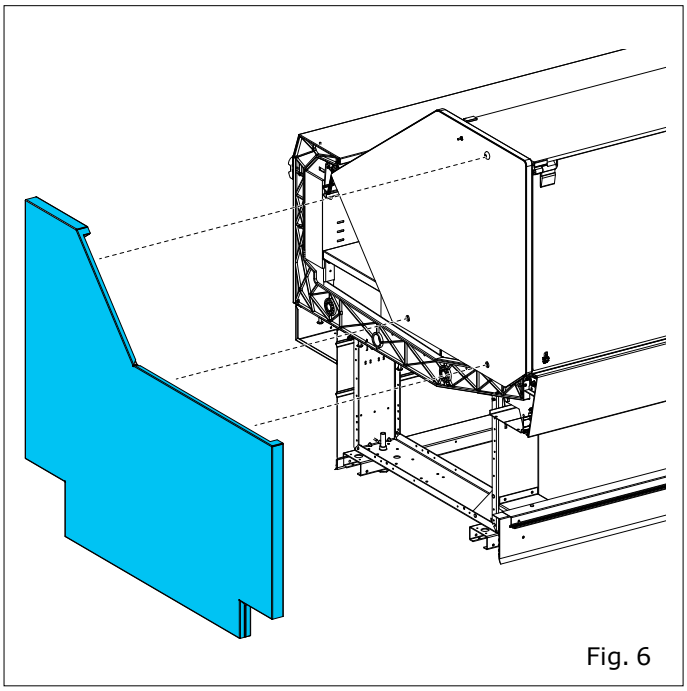

Fig. 6

7) Remove the front panels.

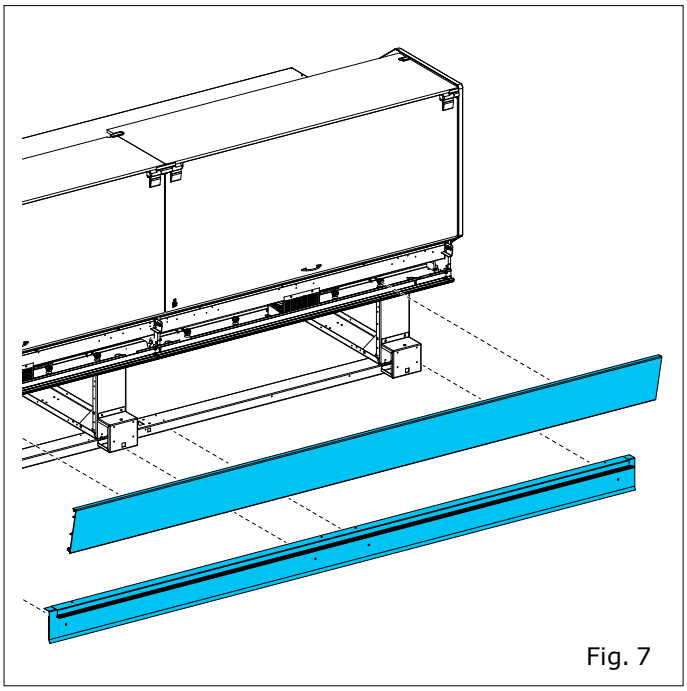

Fig. 7

8) Open the front windows. Undo the screws holding the glasses and remove them.

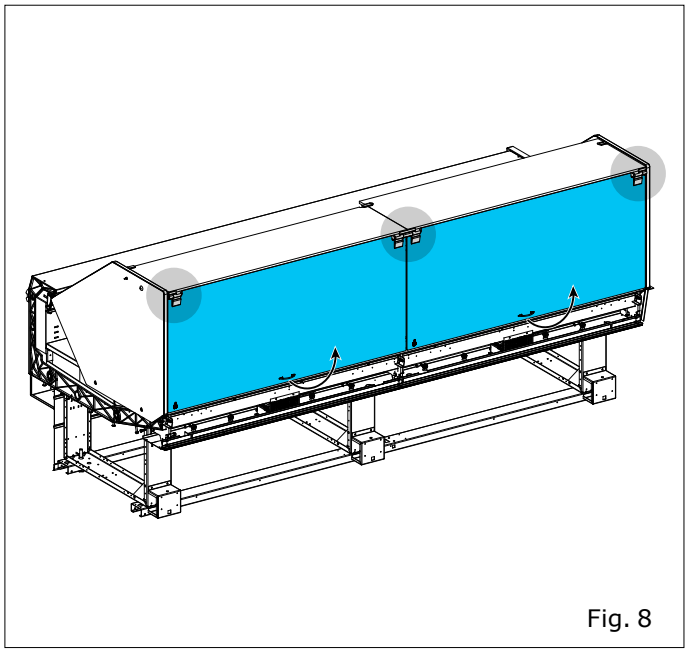

Fig. 8

9) Remove the upper glasses. Undo the screws and remove the uprights.

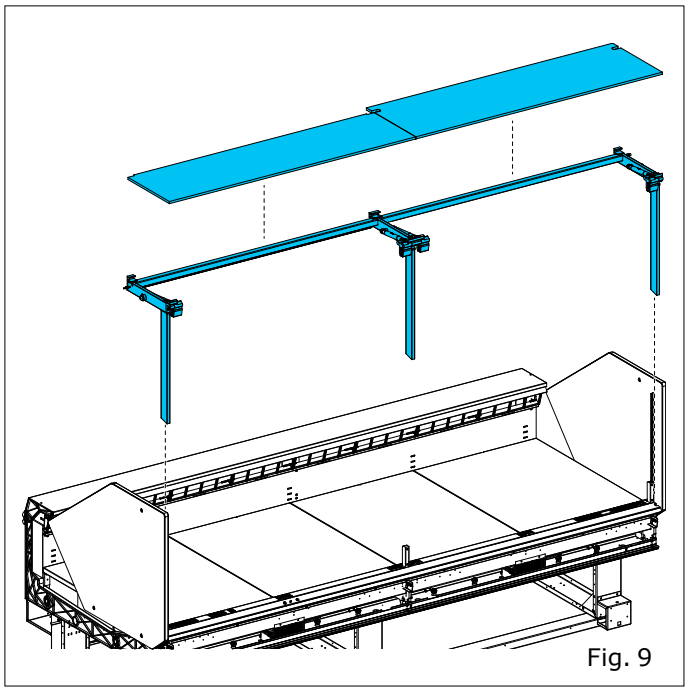

Fig. 9

Dissasembly manual

IT
FR
EN
DE
ES
PT

10) Remove the side glasses.

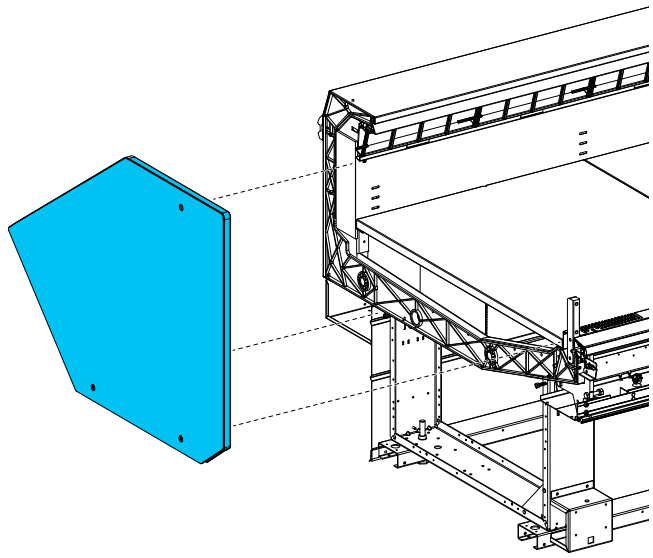

Fig. 10

11) Remove the brackets that hold the glasses.

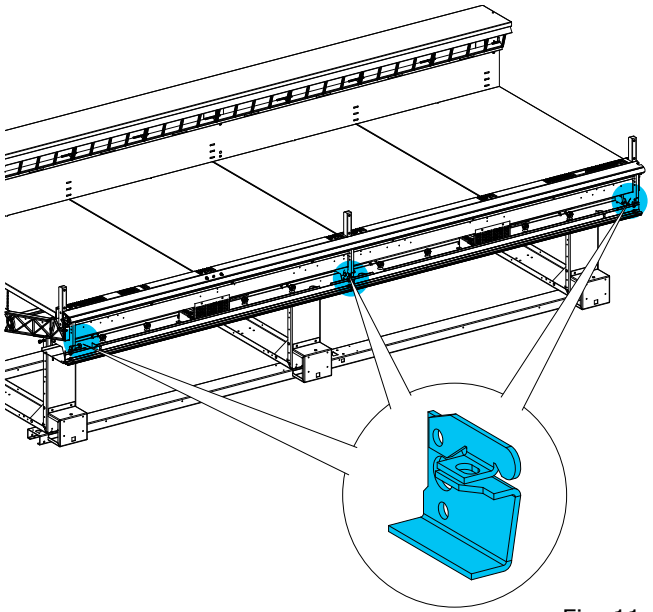

Fig. 11

12) Remove the inner panel.

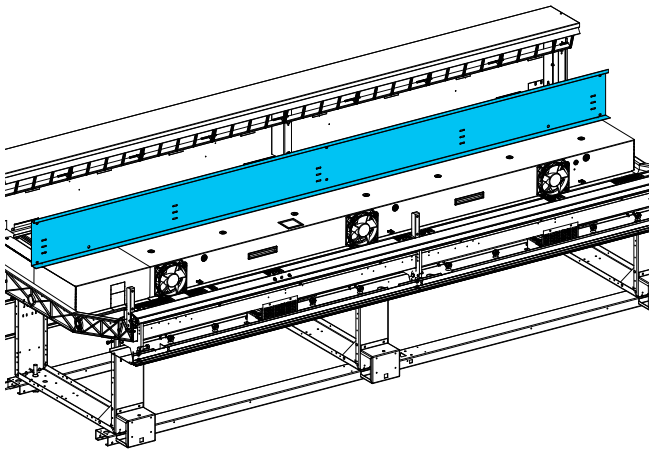

Fig. 12

13) Remove the top panel.

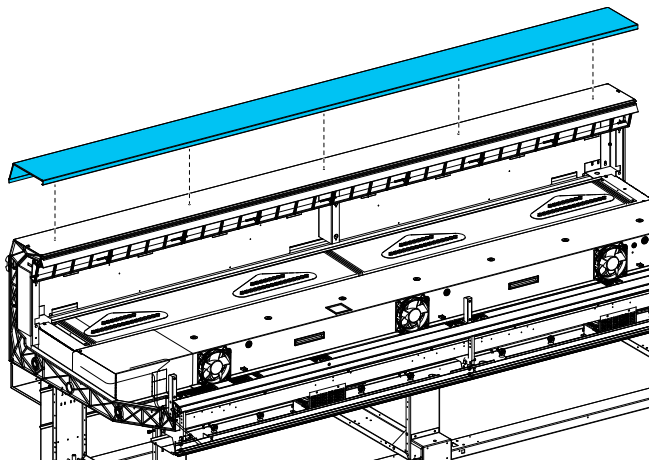

Fig. 13

14) Remove the lights and light holder. Remove the honeycomb grid.

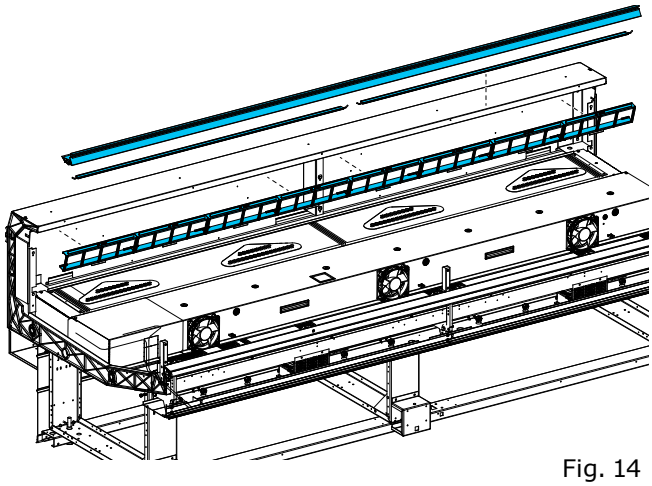

Fig. 14

15) Remove the fan holder.

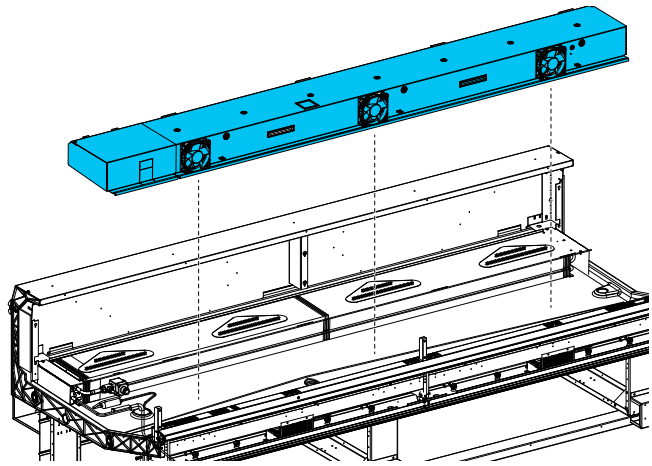

Fig. 15

16) Remove the evaporator.

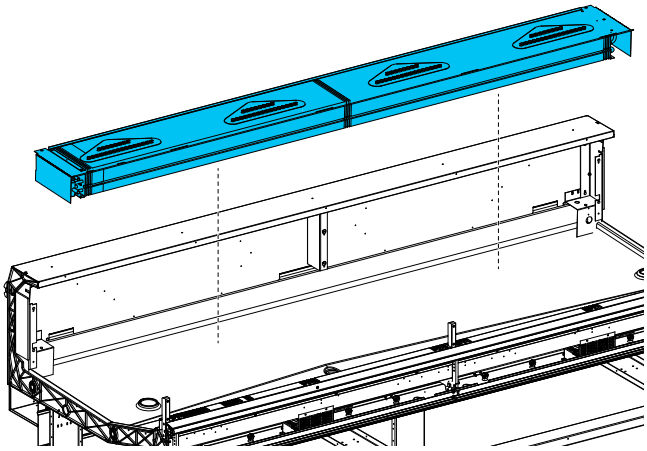

Fig. 16

17) Remove the front air intake. Remove the evaporator supports.

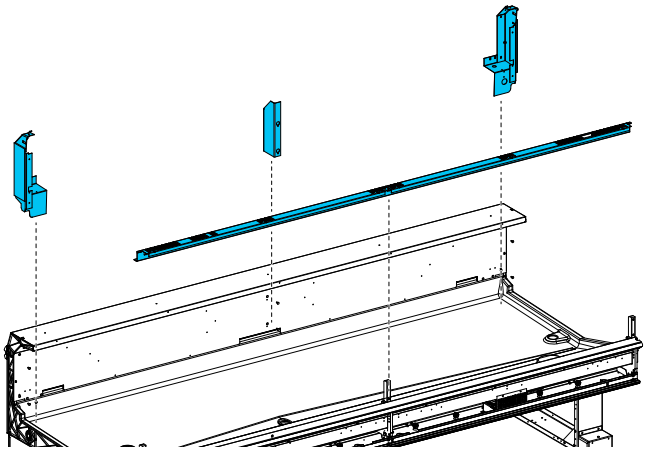

Fig. 17

Dissasembly manual

IT
FR
EN
DE
ES
PT

18) Remove the front bracket. Remove the front pillars.

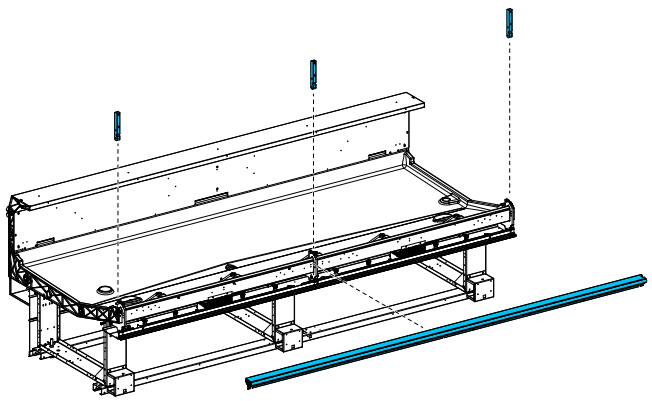

Fig. 18

19) Remove the glass brackets. Remove the front panel with the fans.

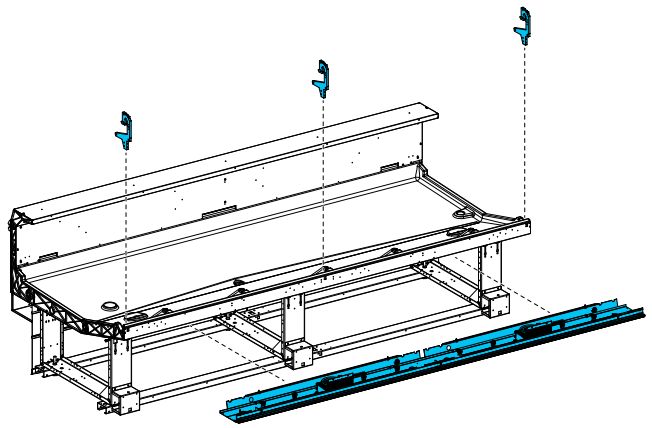

Fig. 19

20) Remove the electrical panels from the rear.

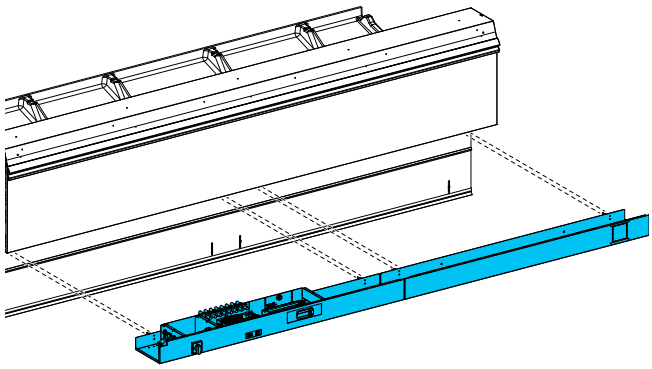

Fig. 20

21) Remove the back panel.

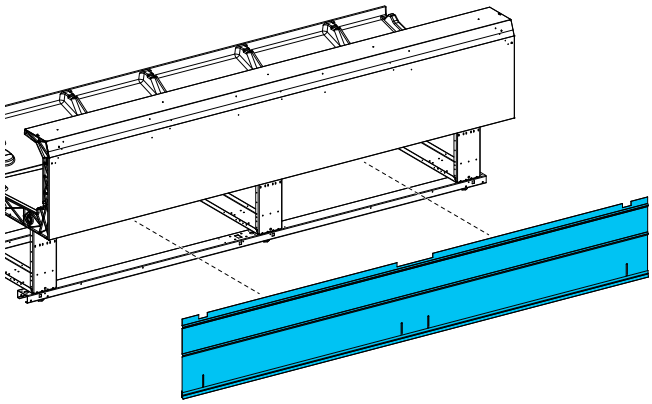

Fig. 21

22) Separate the base from the basin.

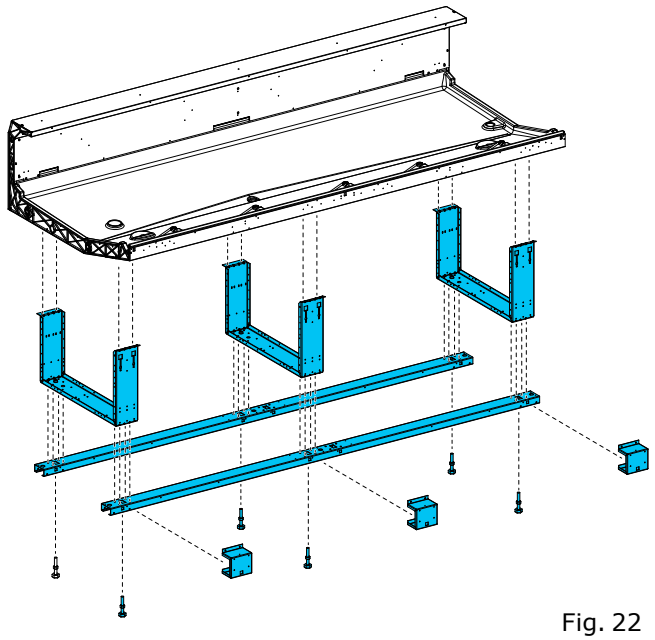

Fig. 22

Bonnet Névé

eptarefrigeration

www.bonnetneve.com

Epta

Advanced Solutions for your Store

EUROVENT CERTIFIED PERFORMANCE

www.eurovent-certification.com

Epta S.p.A. participates in the ECC programme for: Refrigerated display cabinets (RDC); Check ongoing validity of certificate online: www.eurovent-certification.com

TÜV AUSTRIA CERTIFIED

EN ISO 9001 20 100 52000877
EN ISO 14001 20 104 141373322
OHSAS 18001 20 118 141373323

CE