Bonnet Névé
eptarefrigeration

Serve-over

Latitude

EPTA ADAMANT

R290

Latitude

LATITUDE										
LATITUDE	**LS**			**LS CLOSED**		**LS MAXI**		**SV**		**DOUBLE**
	Modular		Volum	Modular	Volum	Modular	Volum	Modular	Volum	
	900	1250	1250	1250	1250	1250	1250	1250	1250	1250
	•	•	•	•	•	•	•	•	•	•
Dispaly area Superficie di esposizione Warenpräsentationsfläche Surface d'exposition Superficie expositiva m2	0.93	1.22	1.5	1.38	1.67	1.22 (LDC 100) 1.51 (LDC 175) 1.70 (LDC 225)	1.50 (LDC 100) 1.82 (LDC 175) 2.03 (LDC 225)	1.58	1.88	1.02 (LDC 100) 2.28 (LDC 175)
Loading area Superficie di appoggio Nutzfläche Surface de chargement Superficie de apoyo m2	0.85	1.12	1.40	1.12	1.40	1.16	1.41	1.12	1.40	1.91
Net storage capacity Capacità netta Nutzinhalt volume utile Capacitad neta dm3	62 (LDC 100) 108 (LDC 175)	84 (LDC 100) 147 (LDC 175)	108 (LDC 100) 189 (LDC 175)	147 (LDC 175)	189 (LDC 175)	84 (LDC 100) 147 (LDC 175) 189 (LDC 225)	108 (LDC 100) 189 (LDC 175) 244 (LDC 225)	186	222	144 (LDC 100) 252 (LDC 175)
Dimensions Dimensioni Größe Dimensions Dimensiones LxHxP mm	925x920x925	1250x920x925	1250x920x1125	1250x990x925	1250x990x1125	1250x990x925	1250x990x1125	1250x1300x925	1250x1300x1125	1250x920x1525

LS MODULAR

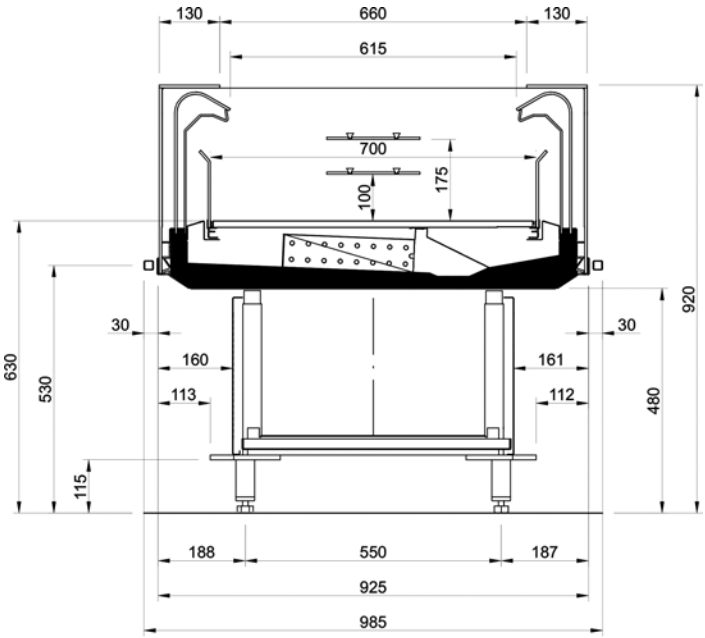

LS VOLUM

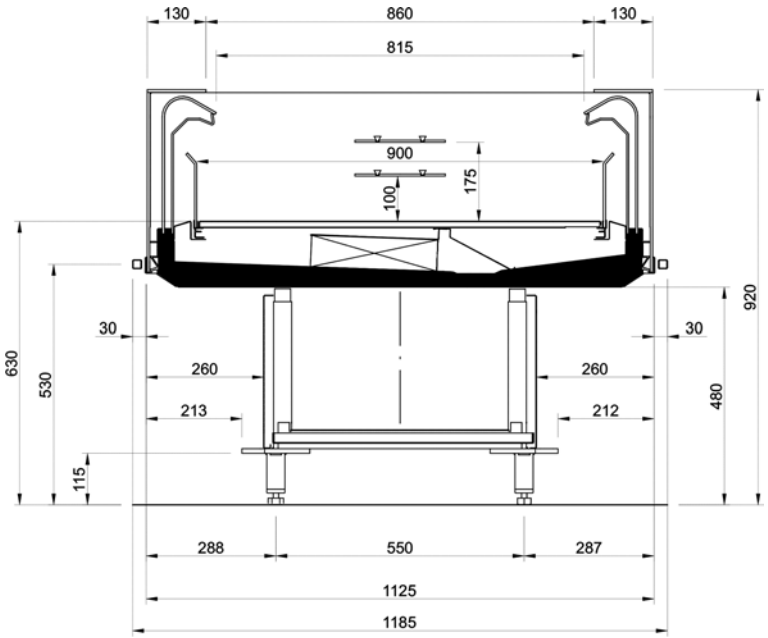

LS MODULAR CLOSED

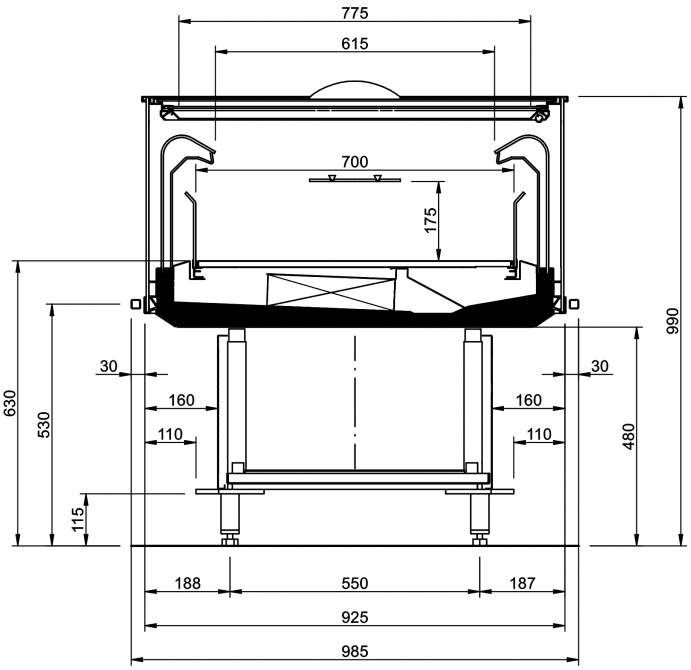

LS VOLUM CLOSED

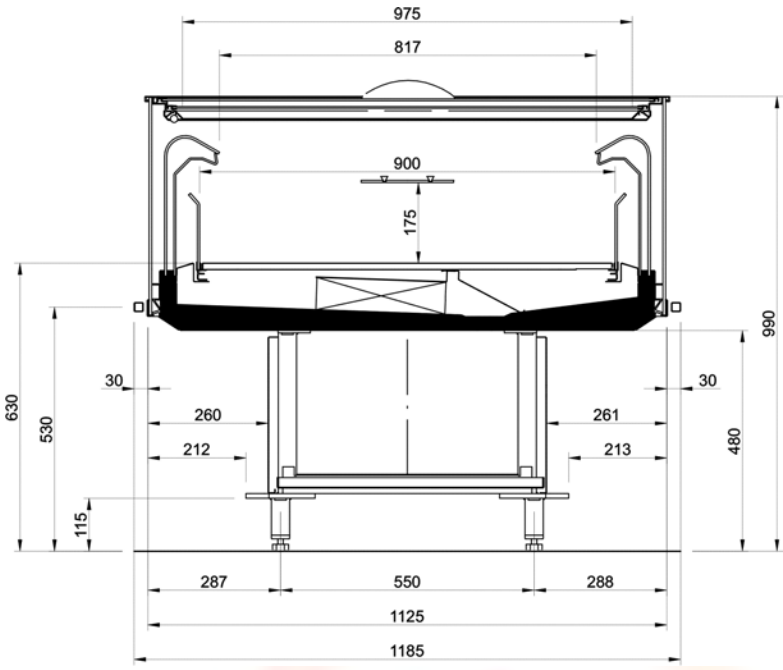

LS MAXI MODULAR

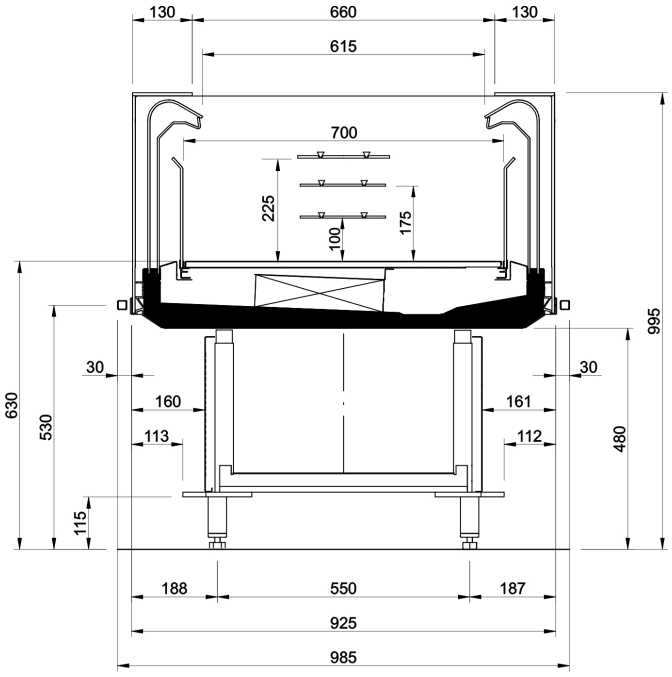

LS MAXI VOLUM

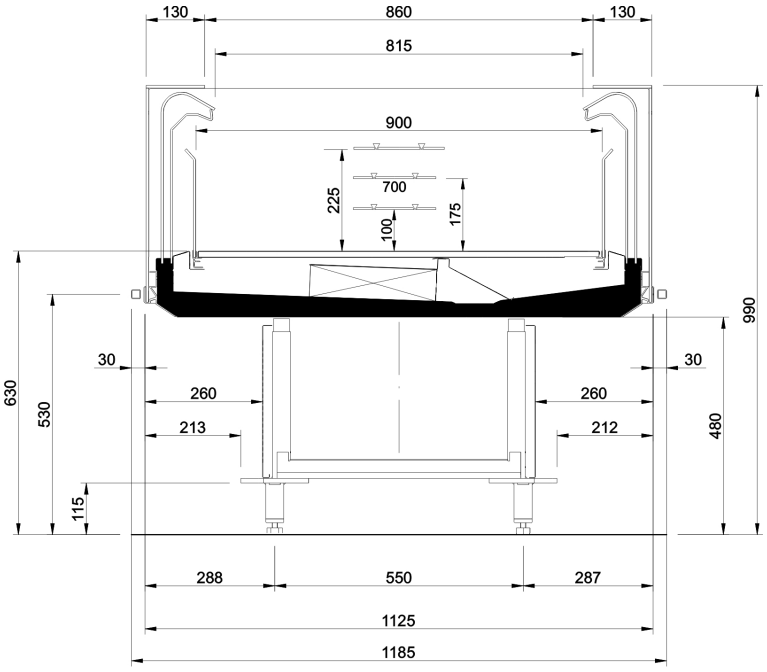

SV MODULAR

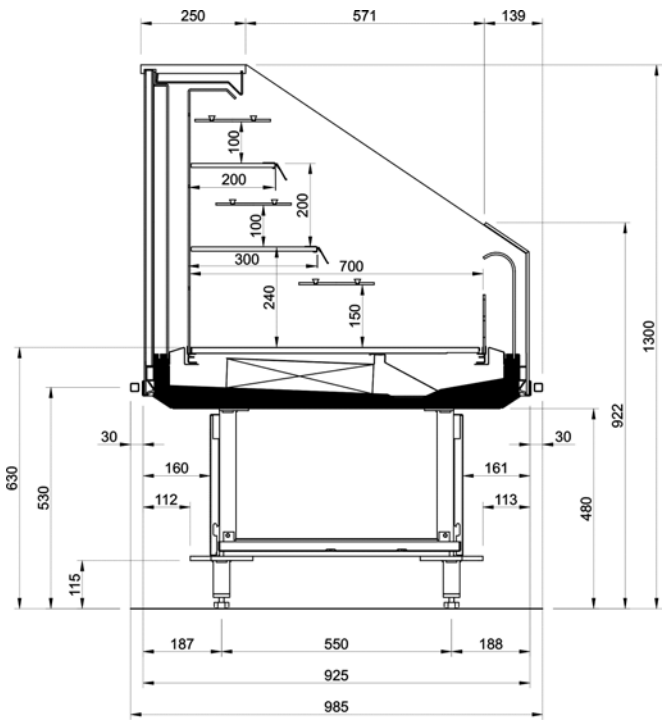

SV VOLUM

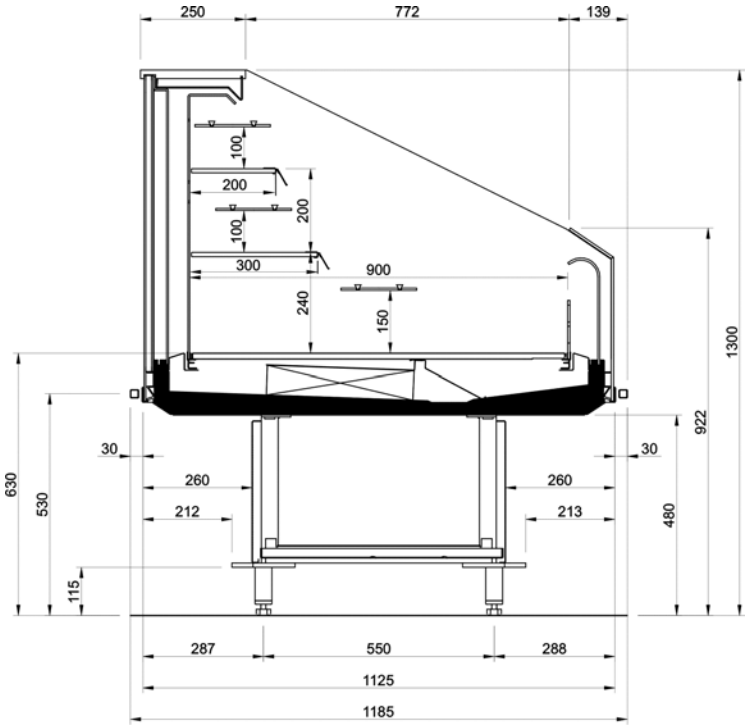

DOUBLE

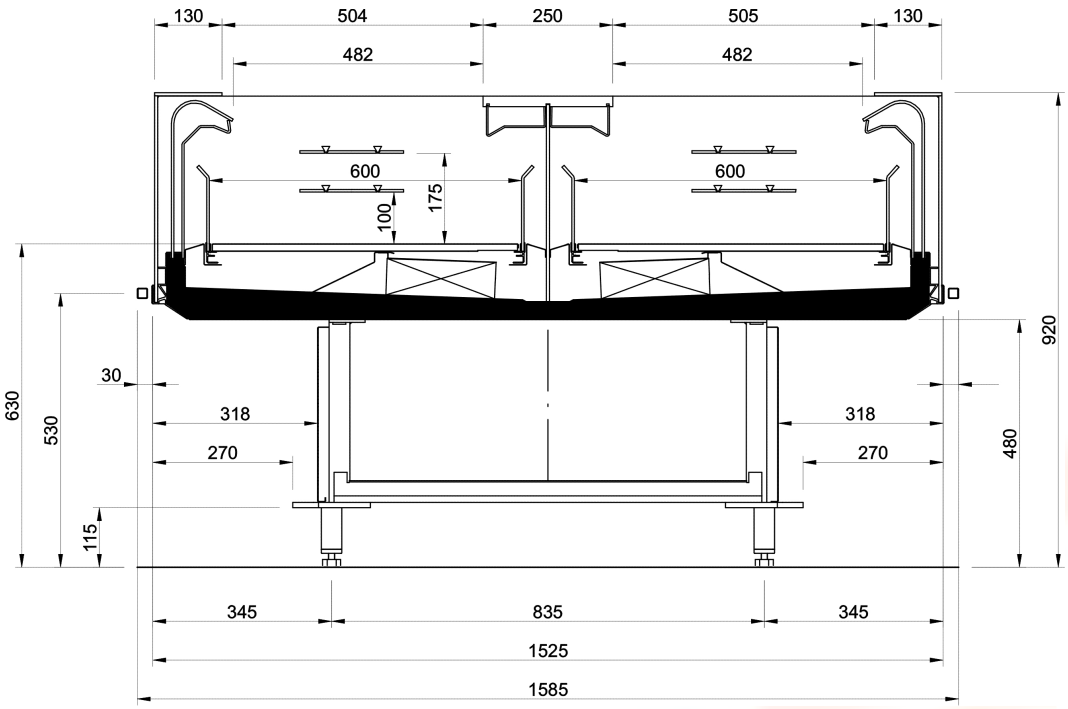

Legend

- Meat
- Chicken
- Fish
- Pre-packed fish
- Delicatessen
- Cheese
- Dairy products
- Gastronomy
- Pastries
- Pre-packed fish
- Fruits and Vegetables
- Sandwiches
- Drinks
- Pizza
- Bread
- Frozen food and ice cream
- Off-cycle defrost
- Electric defrost
- Hot-gas defrosting system
- Manual defrost
- Ventilated
- Static
- Incorporated condensing unit
- Remote condensing unit
- Bagnomaria
- Ceramic glass
- Ice
- VSD Inverter technology
- LED lighing
- Zero C doors
- High efficiency fans
- R290 Propane refrigerant gas (R290)
- R134a R-134a - 400V/3PH/50Hz
- R404A R404A - 400V/3PH/50HZ
- R744 R744 - 400V/PH/50Hz
- Semi-hermetic reciprocating compressor
- Hermetic scroll compressor
- Compressor hermetic reciprocating
- External installation
- Machinery room
- Soundproof housing
- On board condenser
- Remote condenser
- DUAL Medium & Low temperature