SKYVIEW PLUS

SkyEffect

Product categories

Meat | Chicken | Delicatessen | Cheese | Dairy products | Pre-packed fruit&veg | Fruit and Vegetables | Pre-packed fish

Technical features

Ventilated | Remote condensing unit | LED lighting | High efficiency fans | Electric defrost | Off-cycle defrost | EPTABLUE

A ↑ G C

Certification and patents

EUROVENT CERTIFIED PERFORMANCE www.eurovent-certification.com

Epta S.p.A. participates in the ECC programme for: Refrigerated display cabinets (RDC); Check ongoing validity of certificate online: www.eurovent-certification.com

Epta DualAirflow

HighFlux

SKYVIEW PLUS

SkyEffect

Product range

SKYVIEW PLUS																																
Length-Lunghezza Longueur-Länge-Longitud mm			1250		1875		2500		3750		TG1510 Open		TG1510 Open		TG1370 Open or Closed		TG1810 Open		TG2000 Open or Closed		TG2310 Open		TG1510 Open		TG1330 Open		TG1810 Open		TG1960 Open		TG1960 Open	
Altezza mm			20	22	20	22	20	22	20	22	20	22	20	22	20	22	20	22	20	22	20	22	20	22	20	22	20	22	20	22	20	22
SKYVIEW PLUS	**Closed**	**E**	•	•	•	•	•	•	•	•																						
		M	•	•	•	•	•	•	•	•					•	•			•	•												
		V	•	•	•	•	•	•	•	•									•	•												
	Open	**E**	•	•	•	•	•	•	•	•	•			•										•								
		M	•	•	•	•	•	•	•	•					•	•	•	•	•	•	•	•			•	•		•	•	•		
		V	•	•	•	•	•	•	•	•							•	•	•	•	•	•					•	•			•	•
Display area Superficie di esposizione Warenpräsentat-ionsfläche Surface d'exposition Superficie expositiva m2	**Closed**	**E**	3.16	3.42	3.68	3.99	4.21	4.56	6.32	6.84	2.26		2.48																			
		M	3.33	3.59	3.88	4.19	4.44	4.79	6.67	7.19					3.38	3.63	2.84	3.17	4.49	4.82	3.67	4.10										
		V	3.42	3.68	3.99	4.35	4.56	4.91	6.84	7.34							2.92	3.25	4.91	5.29	3.77	4.21										
	Open	**E**	3.39	3.67	3.95	4.28	4.52	4.90	6.78	7.35	3.42												3.87									
		M	3.39	3.67	3.95	4.28	4.52	4.90	6.78	7.35							4.38								3.69	4.00	4.76		4.82	5.23		
		V	3.49	3.77	4.07	4.39	4.65	5.02	6.97	7.63																	4.85	5.25			5.27	5.70
Loading area Superficie di appoggio Nutzfläche Surface de chargement Superficie de apoyo m2	**Closed**	**E**	1.35		1.6		1.85		2.75		1.21		1.21																			
		M	1.65		1.92		2.20		3.30						1.23		1.58		1.77		2.04											
		V	1.95		2.27		2.60		3.90								1.58		2.08		2.04											
	Open	**E**	1.35		1.6		1.85		2.75		1.21												1.21									
		M	1.65		1.92		2.20		3.30								1.58								1.23		1.58		1.77			
		V	1.95		2.27		2.60		3.90																		1.58				2.08	
End thickness Spessore spalla Stärke der Seitenwand Épaisseur de cheque Joue Espesor lateral mm			30.00 (+ 35 Bumper Rail)																													

Cross sections

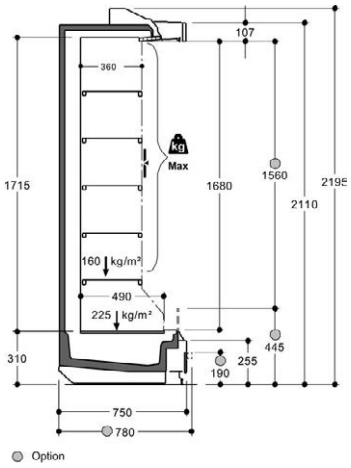

EFFICIA - H20 OPEN

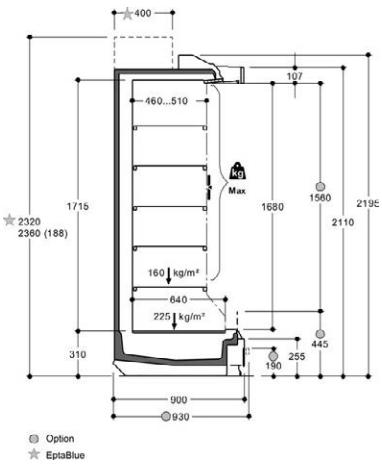

MODULAR - H20 OPEN

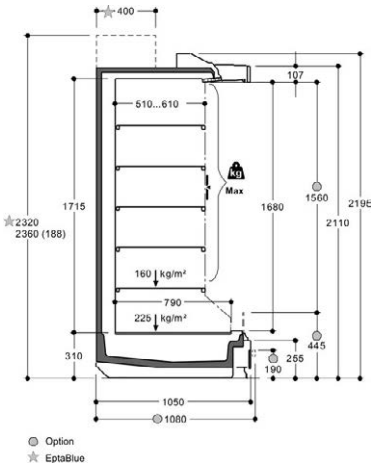

VOLUM - H20 OPEN

SKYVIEW PLUS

SkyEffect

Product range

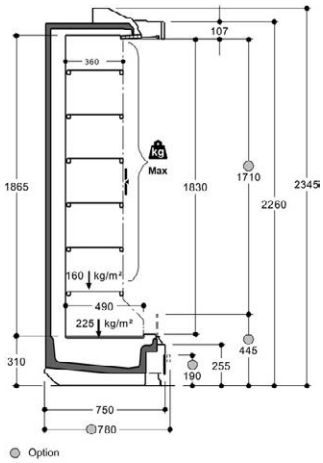

EFFICIA - H22 OPEN

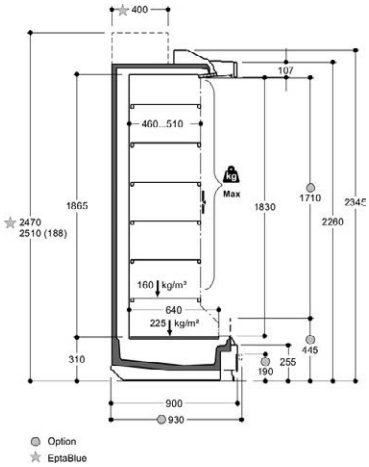

MODULAR - H22 OPEN

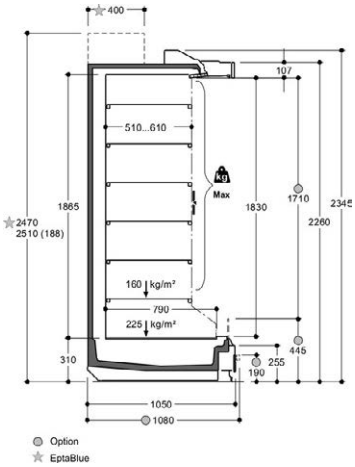

VOLUM - H22 OPEN

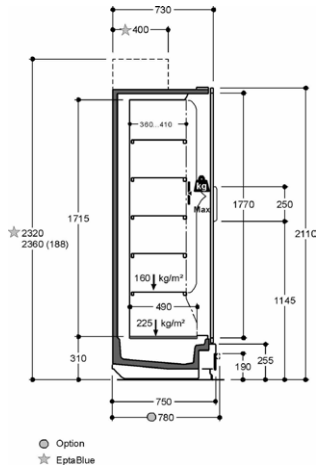

EFFICIA - H20 CLOSED

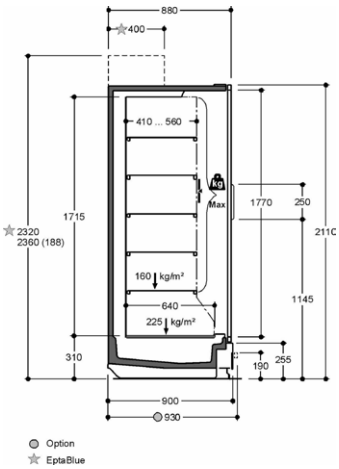

MODULAR - H20 CLOSED

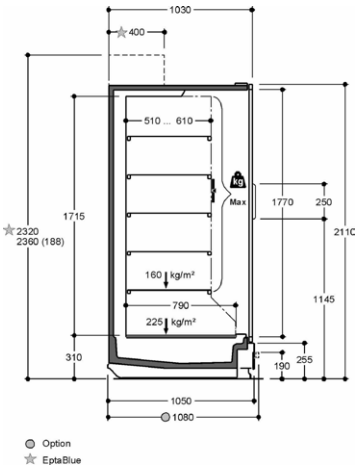

VOLUM - H20 CLOSED

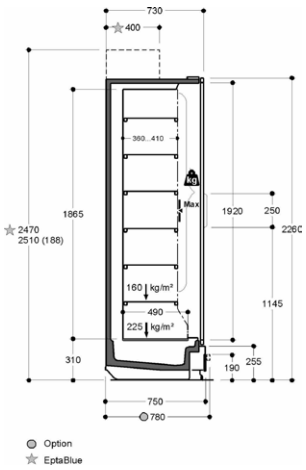

EFFICIA - H22 CLOSED

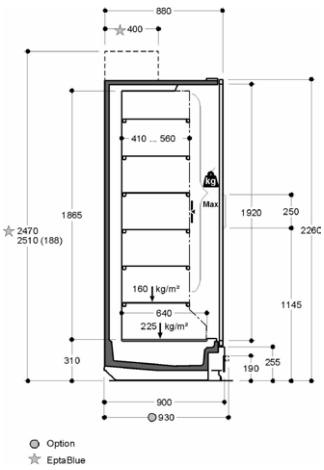

MODULAR - H22 CLOSED

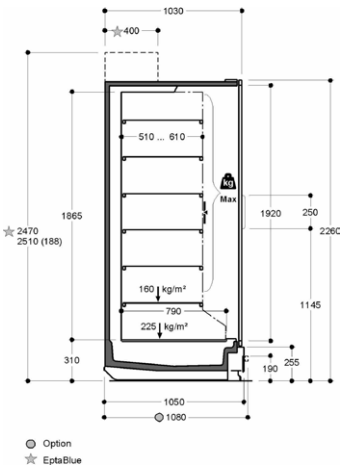

VOLUM - H22 CLOSED