Shape V Style

Epta S.p.A. participates in the ECC programme for: Refrigerated display cabinets (RDC); Check ongoing validity of certificate online: www.eurovent-certification.com or using: www.certiflash.com

Shape V Style

Shape V Style									
Length mm		937	1250	1875	2500	3750	AO 90	AO 45	AF 45
Shape V Style	DD	•	•	•	•	•			
	LD	•	•	•	•	•	•	•	
	ODF	•	•	•	•	•		•	•
	LC	•	•	•	•	•	•	•	•
	DC	•	•	•	•	•	•	•	•
	LS	•	•	•	•	•	•	•	•

Shape V Style

LD

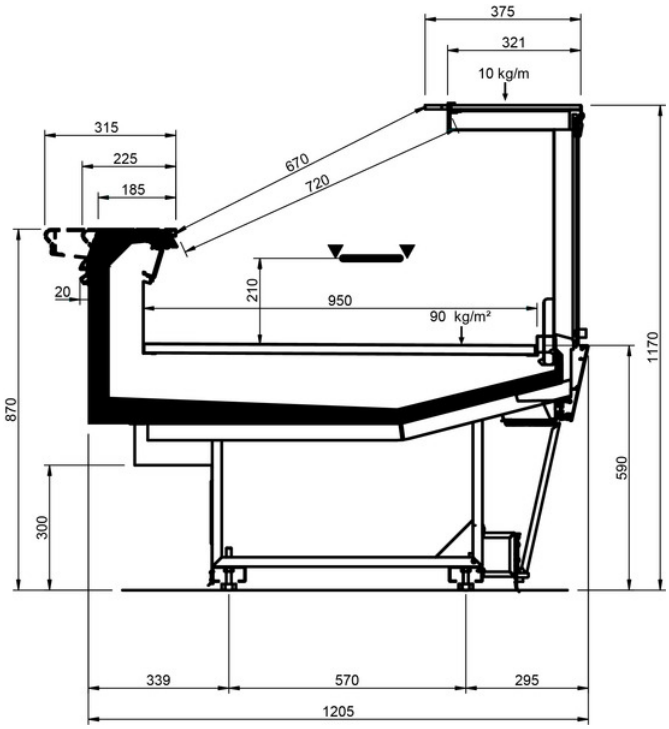

DD

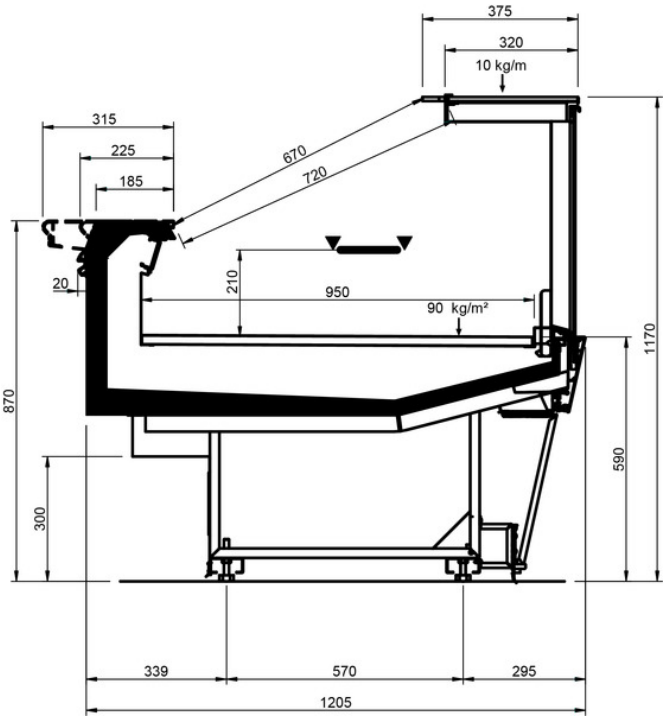

ODF

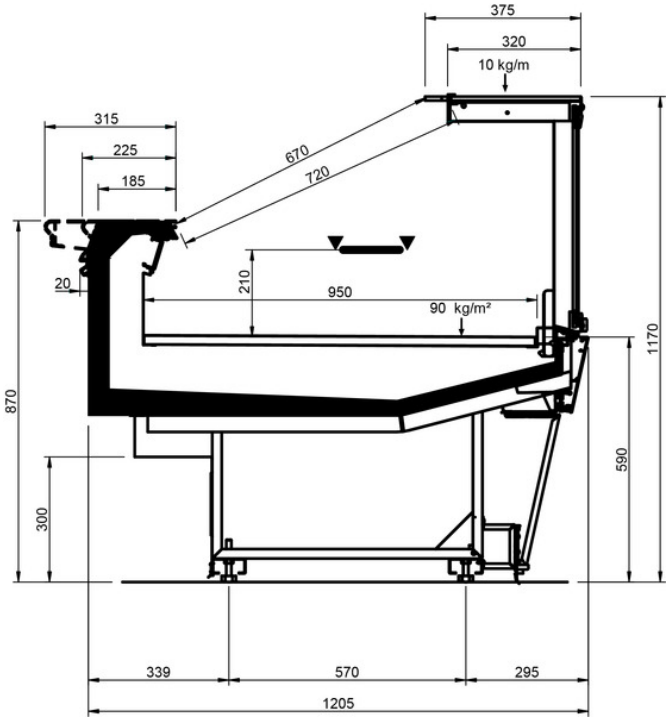

LC

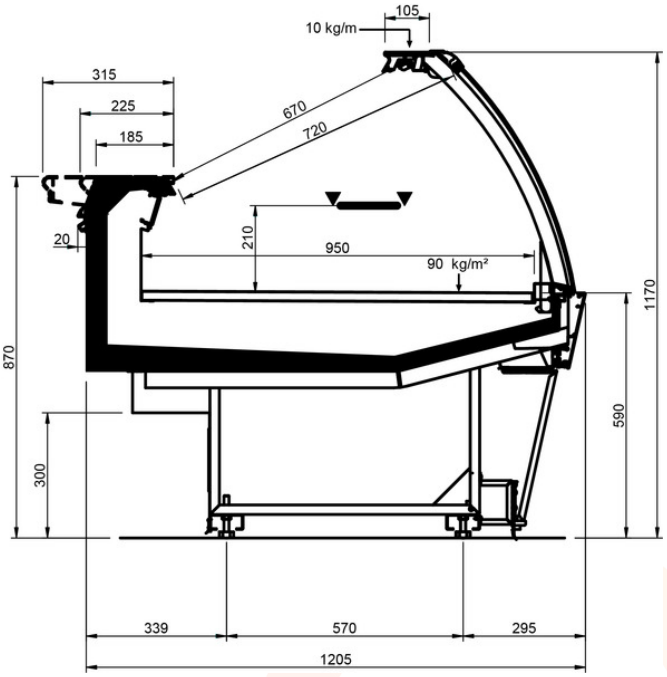

Shape V Style

DC

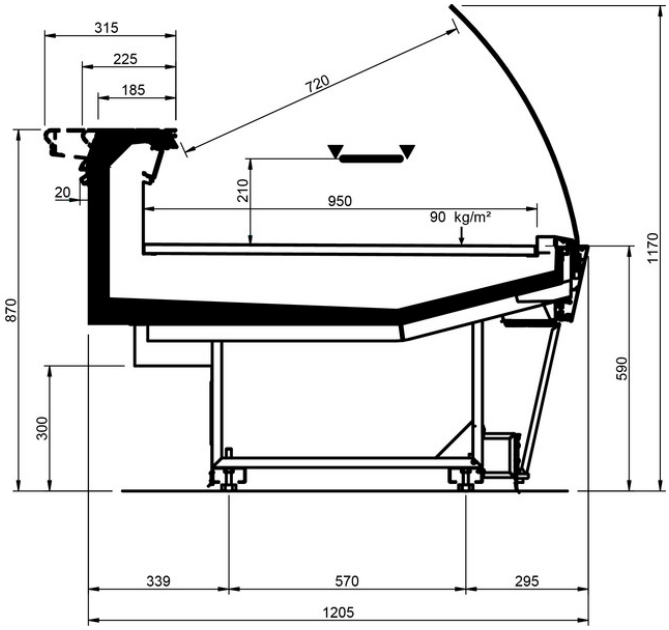

LS-D

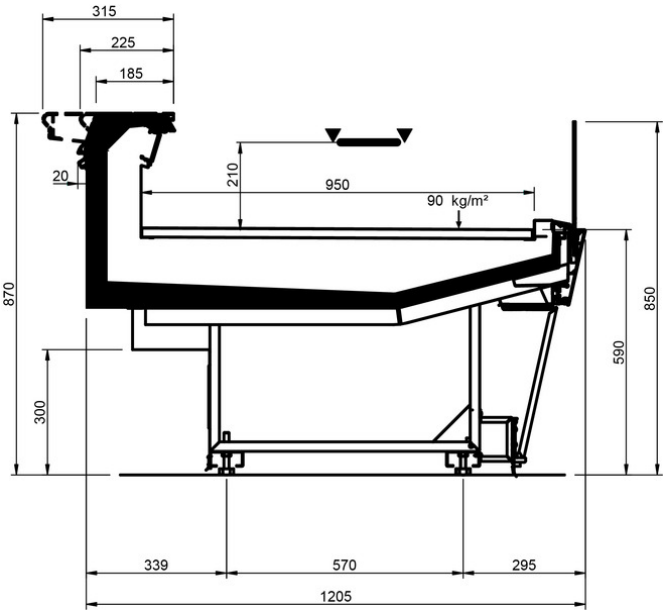

LS-P

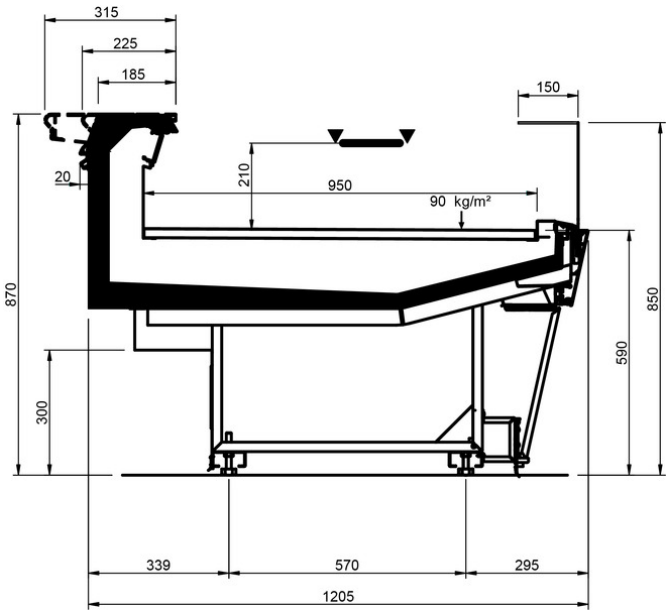

LS-C

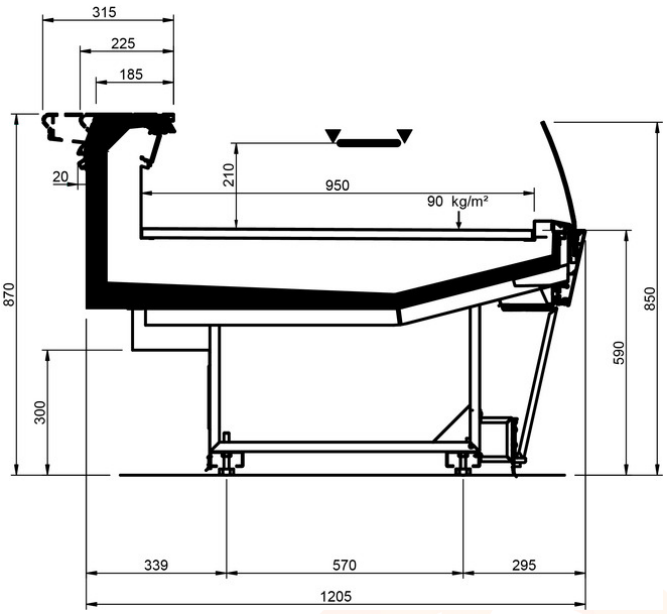

Shape V Style

LD LEGS

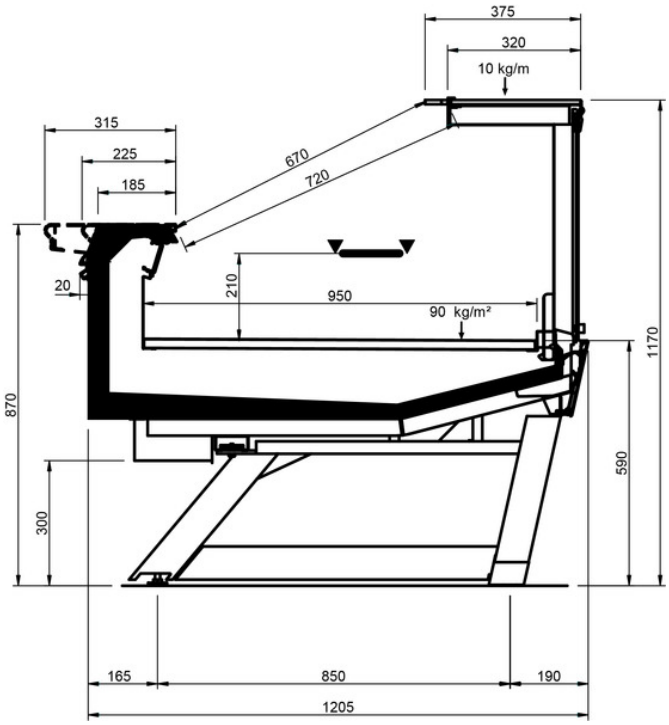

DD LEGS

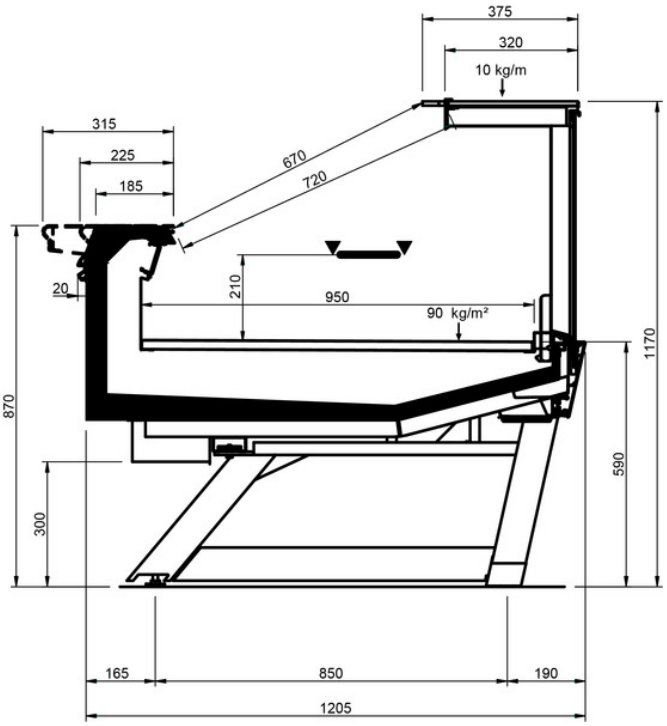

ODF LEGS

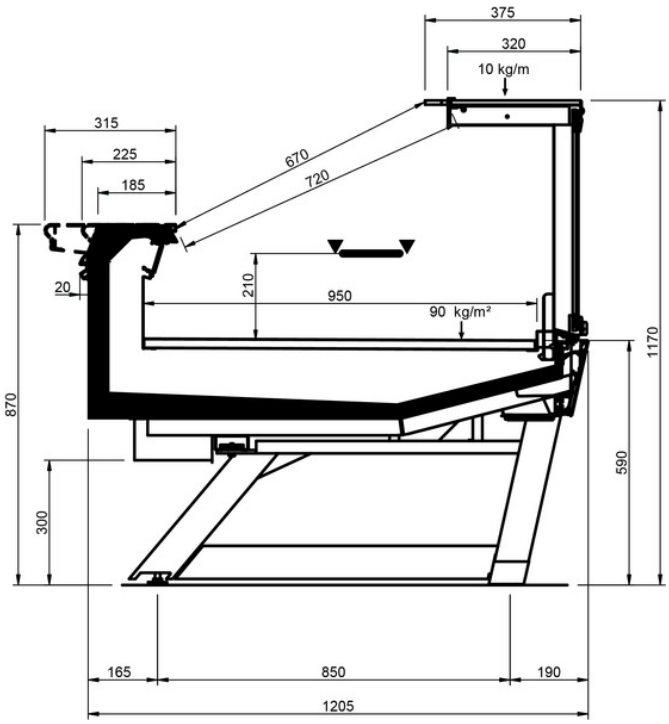

LC LEGS

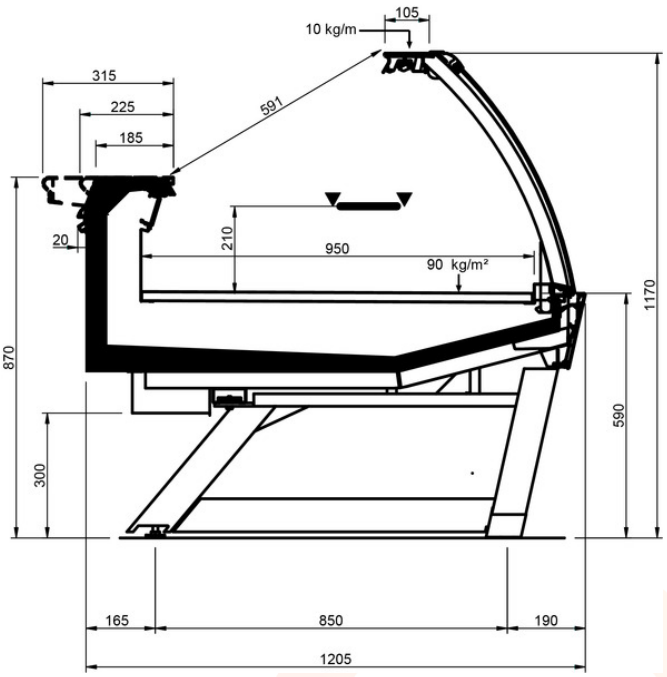

Shape V Style

DC LEGS

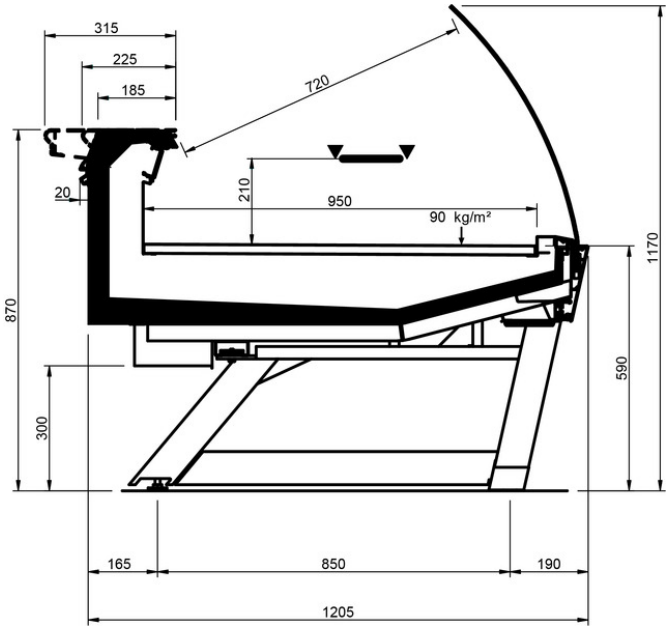

LS-D LEGS

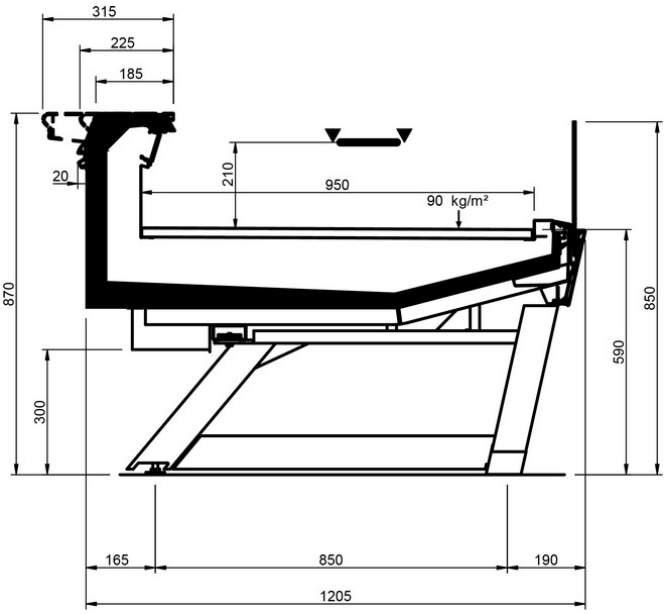

LS-P LEGS

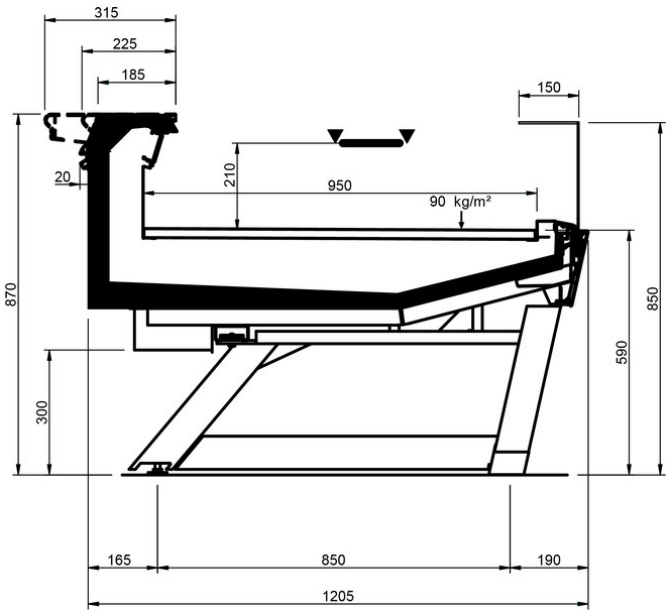

LS-C LEGS

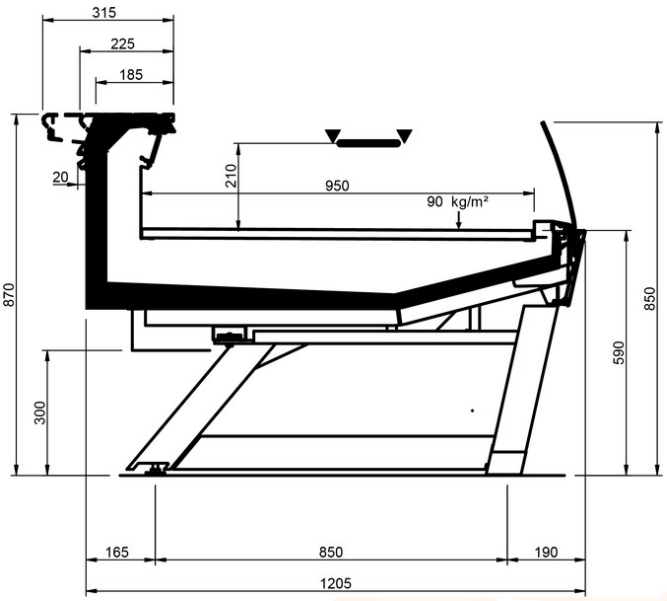

Shape V Style

Legend

- Meat
- Chicken
- Fish
- Pre-packed fish
- Delicatessen
- Cheese
- Dairy products
- Gastronomy
- Pastries
- Pre-packed fish
- Fruits and Vegetables
- Sandwiches
- Drinks
- Pizza
- Bread
- Frozen food and ice cream
- Off-cycle defrost
- Electric defrost
- Hot-gas defrosting system
- Manual defrost
- Ventilated
- Static
- Incorporated condensing unit
- Remote condensing unit
- Bagnomaria
- Ceramic glass
- Ice
- VSD Inverter technology
- LED lighing
- Zero C doors
- High efficiency fans
- R290 Propane refrigerant gas (R290)
- R134a R-134a - 400V/3PH/50Hz
- R404A R404A - 400V/3PH/50HZ
- R744 R744 - 400V/PH/50Hz
- Semi-hermetic reciprocating compressor
- Hermetic scroll compressor
- Compressor hermetic reciprocating
- External installation
- Machinery room
- Soundproof housing
- On board condenser
- Remote condenser
- DUAL Medium & Low temperature